DS-KD8003 Series Module Door Station

User Manual

Legal Information

About this Document

- This Document includes instructions for using and managing the Product. Pictures, charts, images and all other information hereinafter are for description and explanation only.
- The information contained in the Document is subject to change, without notice, due to firmware updates or other reasons. Please find the latest version of the Document at the Hikvision website (***https://www.hikvision.com***). Unless otherwise agreed, Hangzhou Hikvision Digital Technology Co., Ltd. or its affiliates (hereinafter referred to as "Hikvision") makes no warranties, express or implied.
- Please use the Document with the guidance and assistance of professionals trained in supporting the Product.

About this Product

This product can only enjoy the after-sales service support in the country or region where the purchase is made.

Acknowledgment of Intellectual Property Rights

- Hikvision owns the copyrights and/or patents related to the technology embodied in the Products described in this Document, which may include licenses obtained from third parties.
- Any part of the Document, including text, pictures, graphics, etc., belongs to Hikvision. No part of this Document may be excerpted, copied, translated, or modified in whole or in part by any means without written permission.
- HIKVISION and other Hikvision's trademarks and logos are the properties of Hikvision in various jurisdictions.
- Other trademarks and logos mentioned are the properties of their respective owners.

LEGAL DISCLAIMER

- TO THE MAXIMUM EXTENT PERMITTED BY APPLICABLE LAW, THIS DOCUMENT AND THE PRODUCT DESCRIBED, WITH ITS HARDWARE, SOFTWARE AND FIRMWARE, ARE PROVIDED "AS IS" AND "WITH ALL FAULTS AND ERRORS". HIKVISION MAKES NO WARRANTIES, EXPRESS OR IMPLIED, INCLUDING WITHOUT LIMITATION, MERCHANTABILITY, SATISFACTORY QUALITY, OR FITNESS FOR A PARTICULAR PURPOSE. THE USE OF THE PRODUCT BY YOU IS AT YOUR OWN RISK. IN NO EVENT WILL HIKVISION BE LIABLE TO YOU FOR ANY SPECIAL, CONSEQUENTIAL, INCIDENTAL, OR INDIRECT DAMAGES, INCLUDING, AMONG OTHERS, DAMAGES FOR LOSS OF BUSINESS PROFITS, BUSINESS INTERRUPTION, OR LOSS OF DATA, CORRUPTION OF SYSTEMS, OR LOSS OF DOCUMENTATION, WHETHER BASED ON BREACH OF CONTRACT, TORT (INCLUDING NEGLIGENCE), PRODUCT LIABILITY, OR OTHERWISE, IN CONNECTION WITH THE USE OF THE

PRODUCT, EVEN IF HIKVISION HAS BEEN ADVISED OF THE POSSIBILITY OF SUCH DAMAGES OR LOSS.

- YOU ACKNOWLEDGE THAT THE NATURE OF THE INTERNET PROVIDES FOR INHERENT SECURITY RISKS, AND HIKVISION SHALL NOT TAKE ANY RESPONSIBILITIES FOR ABNORMAL OPERATION, PRIVACY LEAKAGE OR OTHER DAMAGES RESULTING FROM CYBER-ATTACK, HACKER ATTACK, VIRUS INFECTION, OR OTHER INTERNET SECURITY RISKS; HOWEVER, HIKVISION WILL PROVIDE TIMELY TECHNICAL SUPPORT IF REQUIRED.
- YOU AGREE TO USE THIS PRODUCT IN COMPLIANCE WITH ALL APPLICABLE LAWS, AND YOU ARE SOLELY RESPONSIBLE FOR ENSURING THAT YOUR USE CONFORMS TO THE APPLICABLE LAW. ESPECIALLY, YOU ARE RESPONSIBLE, FOR USING THIS PRODUCT IN A MANNER THAT DOES NOT INFRINGE ON THE RIGHTS OF THIRD PARTIES, INCLUDING WITHOUT LIMITATION, RIGHTS OF PUBLICITY, INTELLECTUAL PROPERTY RIGHTS, OR DATA PROTECTION AND OTHER PRIVACY RIGHTS. YOU SHALL NOT USE THIS PRODUCT FOR ANY PROHIBITED END-USES, INCLUDING THE DEVELOPMENT OR PRODUCTION OF WEAPONS OF MASS DESTRUCTION, THE DEVELOPMENT OR PRODUCTION OF CHEMICAL OR BIOLOGICAL WEAPONS, ANY ACTIVITIES IN THE CONTEXT RELATED TO ANY NUCLEAR EXPLOSIVE OR UNSAFE NUCLEAR FUEL-CYCLE, OR IN SUPPORT OF HUMAN RIGHTS ABUSES.
- IN THE EVENT OF ANY CONFLICTS BETWEEN THIS DOCUMENT AND THE APPLICABLE LAW, THE LATTER PREVAILS.

© Hangzhou Hikvision Digital Technology Co., Ltd. All rights reserved.

Symbol Conventions

The symbols that may be found in this document are defined as follows.

Symbol	Description
Danger	Indicates a hazardous situation which, if not avoided, will or could result in death or serious injury.
Caution	Indicates a potentially hazardous situation which, if not avoided, could result in equipment damage, data loss, performance degradation, or unexpected results.
Note	Provides additional information to emphasize or supplement important points of the main text.

Regulatory Information

EU Conformity Statement

This product and - if applicable - the supplied accessories too are marked with "CE" and comply therefore with the applicable harmonized European standards listed under the EMC Directive 2014/30/EU, the RoHS Directive 2011/65/EU

2012/19/EU (WEEE directive): Products marked with this symbol cannot be disposed of as unsorted municipal waste in the European Union. For proper recycling, return this product to your local supplier upon the purchase of equivalent new equipment, or dispose of it at designated collection points. For more information see: www.recyclethis.info

2006/66/EC (battery directive): This product contains a battery that cannot be disposed of as unsorted municipal waste in the European Union. See the product documentation for specific battery information. The battery is marked with this symbol, which may include lettering to indicate cadmium (Cd), lead (Pb), or mercury (Hg). For proper recycling, return the battery to your supplier or to a designated collection point. For more information see:www.recyclethis.info

Industry Canada ICES-003 Compliance

This device meets the CAN ICES-3 (B)/NMB-3(B) standards requirements.
This device complies with Industry Canada licence-exempt RSS standard(s). Operation is subject to the following two conditions:

1. this device may not cause interference, and
2. this device must accept any interference, including interference that may cause undesired operation of the device.

Le présent appareil est conforme aux CNR d'Industrie Canada applicables aux appareils radioexempts de licence. L'exploitation est autorisée aux deux conditions suivantes :

1. l'appareil ne doit pas produire de brouillage, et
2. l'utilisateur de l'appareil doit accepter tout brouillage radioélectrique subi, même si le brouillage est susceptible d'en compromettre le fonctionnement.

Under Industry Canada regulations, this radio transmitter may only operate using an antenna of a type and maximum (or lesser) gain approved for the transmitter by Industry Canada. To reduce potential radio interference to other users, the antenna type and its gain should be so chosen that the equivalent isotropically radiated power (e.i.r.p.) is not more than that necessary for successful communication.

Conformément à la réglementation d'Industrie Canada, le présent émetteur radio peut fonctionner avec une antenne d'un type et d'un gain maximal (ou inférieur) approuvé pour l'émetteur par Industrie Canada. Dans le but de réduire les risques de brouillage radioélectrique à l'intention des autres utilisateurs, il faut choisir le type d'antenne et son gain de sorte que la puissance isotrope rayonnée équivalente (p.i.r.e.) ne dépasse pas l'intensité nécessaire à l'établissement d'une communication satisfaisante.

This equipment should be installed and operated with a minimum distance 20cm between the radiator and your body.

Cet équipement doit être installé et utilisé à une distance minimale de 20 cm entre le radiateur et votre corps.

Contents

Chapter 1 Appearance 1

Chapter 2 Configure Sub Module Address 8

Chapter 3 Terminal and Wiring 10

3.1 Terminal Description 10

3.2 Module Door Station Wiring 15

3.2.1 Door Lock Wiring 15

3.2.2 Door Contact Wiring 16

3.2.3 Exit Button Wiring 17

Chapter 4 Installation 18

4.1 One-Module Installation 19

4.1.1 One-Module Surface Mounting 19

4.1.2 One-Module Flush Mounting 24

4.2 Two-Module Installation 30

4.2.1 Two-Module Surface Mounting 30

4.2.2 Two-Module Flush Mounting 35

4.3 Three-Module Installation 41

4.3.1 Three-Module Surface Installation 41

4.3.2 Three-Module Flush Mounting 48

4.4 More-Than-Three Module Installation 53

4.4.1 More-than-Three Module Surface Mounting 53

4.4.2 More-Than-Three Module Flush Mounting 63

Chapter 5 Activation 72

5.1 Activate via Web Browser 72

Chapter 6 Configuration via Web Client 73

6.1 Login Web Browser 73

6.2 Live View 73

6.3 Person Management 74
6.4 Device Management 76
6.5 Remote Configuration 77
6.5.1 Local Parameters Settings 77
6.5.2 View Device Information 78
6.5.3 Set Time 78
6.5.4 Set DST 79
6.5.5 View Open Source Software License 79
6.5.6 Upgrade and Maintenance 79
6.5.7 Security Service 80
6.5.8 Change Administrator's Password 80
6.5.9 Account Security Settings 81
6.5.10 View Device Arming/Disarming Information 81
6.5.11 Network Settings 81
6.5.12 Video & Audio Settings 85
6.5.13 Image Settings 88
6.5.14 Event Settings 91
6.5.15 Schedule Settings 95
6.5.16 Set Card Security 96
6.5.17 Intercom Settings 97
6.5.18 Access Control Settings 101

Chapter 1 Appearance

Main Unit

Main Unit (with Button)

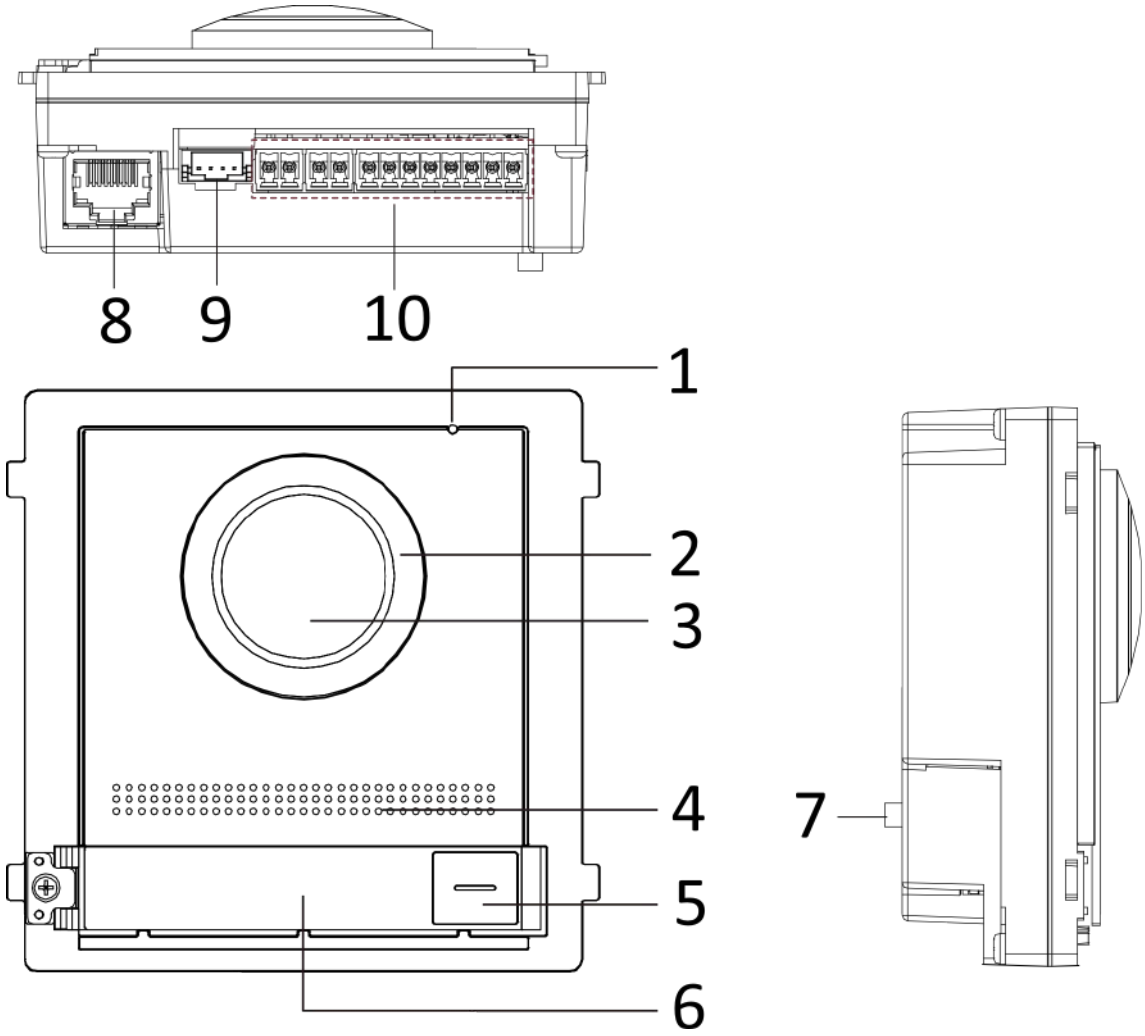

Figure 1-1 Main Unit (with Button) Appearance

Table 1-1 Appearance Description

No.	Description
1	Microphone
2	Low Illumination IR Supplement Light

No.	Description
3	Built-in Camera
4	Loudspeaker
5	Call Button
6	Nametag
7	TAMPER
8	Network Interface
9	Module-Connecting Interface (output)
10	Terminals

Main Unit (without Button)

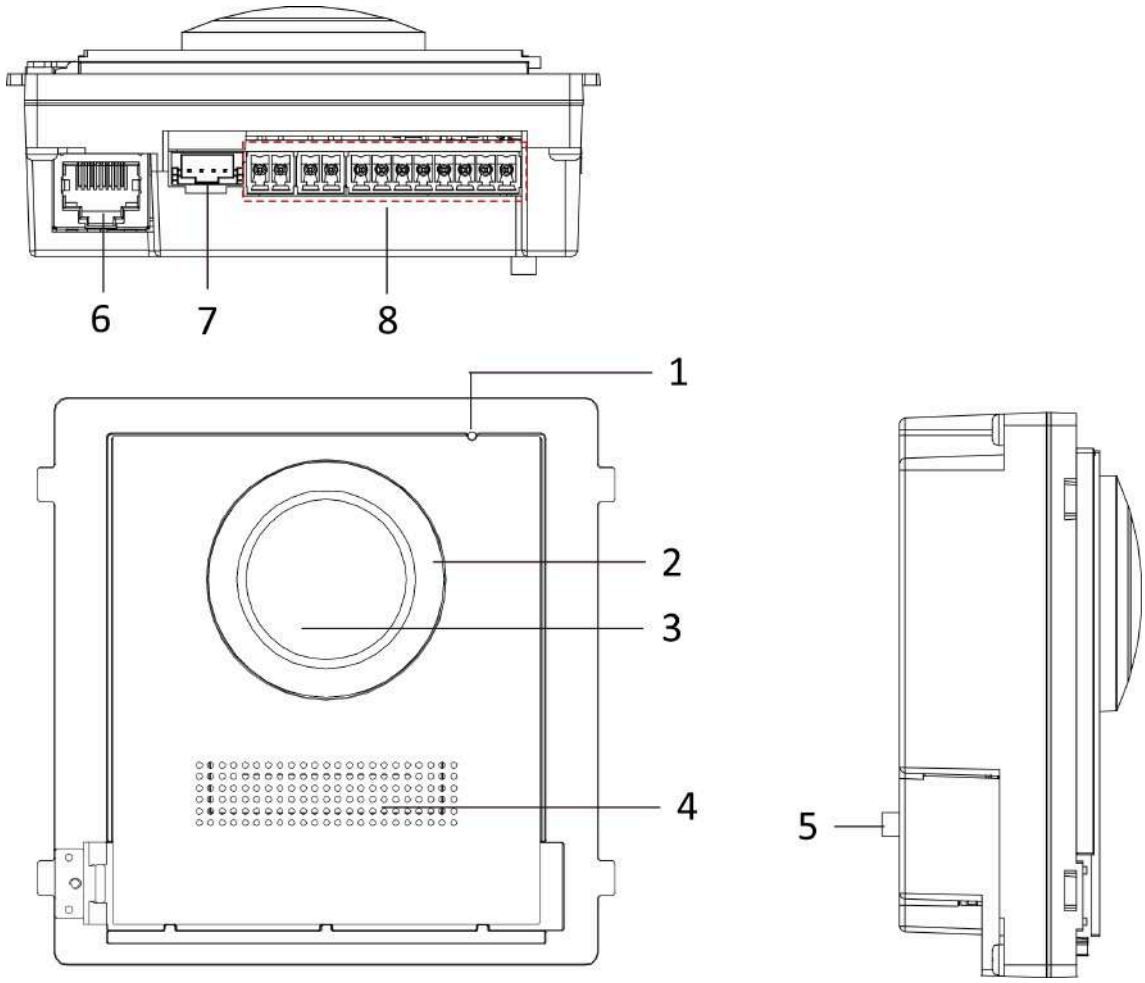

Figure 1-2 Main Unit (without Button) Appearance

Table 1-2 Appearance Description

No.	Description
1	Microphone
2	Low Illumination IR Supplement Light
3	Built-in Camera
4	Loudspeaker
5	TAMPER
6	Network Interface

No.	Description
7	Module-Connecting Interface (Output)
8	Terminals

Note

- Nametag area supports insert customized name card. The suggested card size is: 58 (L) x 11.7(W) mm.
- The module connecting interface is used to connect other function module, such as nametag module, keypad module, card reader module, etc. All these modules are known as sub module.

Two-Wire Main Unit

Two-Wire Main Unit (with Button)

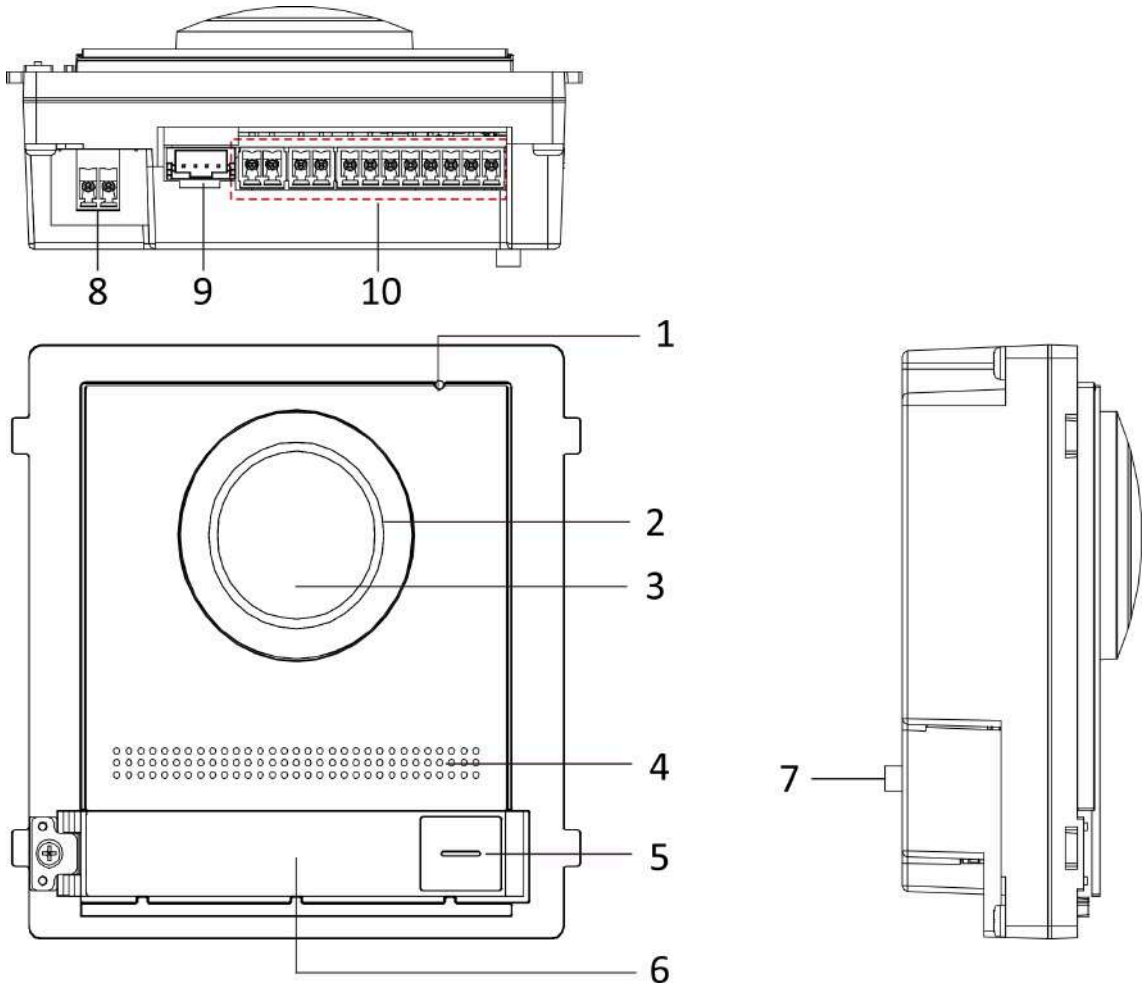

Figure 1-3 Two-Wire Main Unit (with Button) Appearance

Table 1-3 Appearance Description

No.	Description
1	Microphone
2	Low Illumination IR Supplement Light
3	Built-in Camera
4	Loudspeaker
5	Call Button
6	Nametag
7	TAMPER

No.	Description
8	Two-Wire Interface (24 VDC Power Input)
9	Module-Connecting Interface (output)
10	Terminals

Two-Wire Main Unit (without Button)

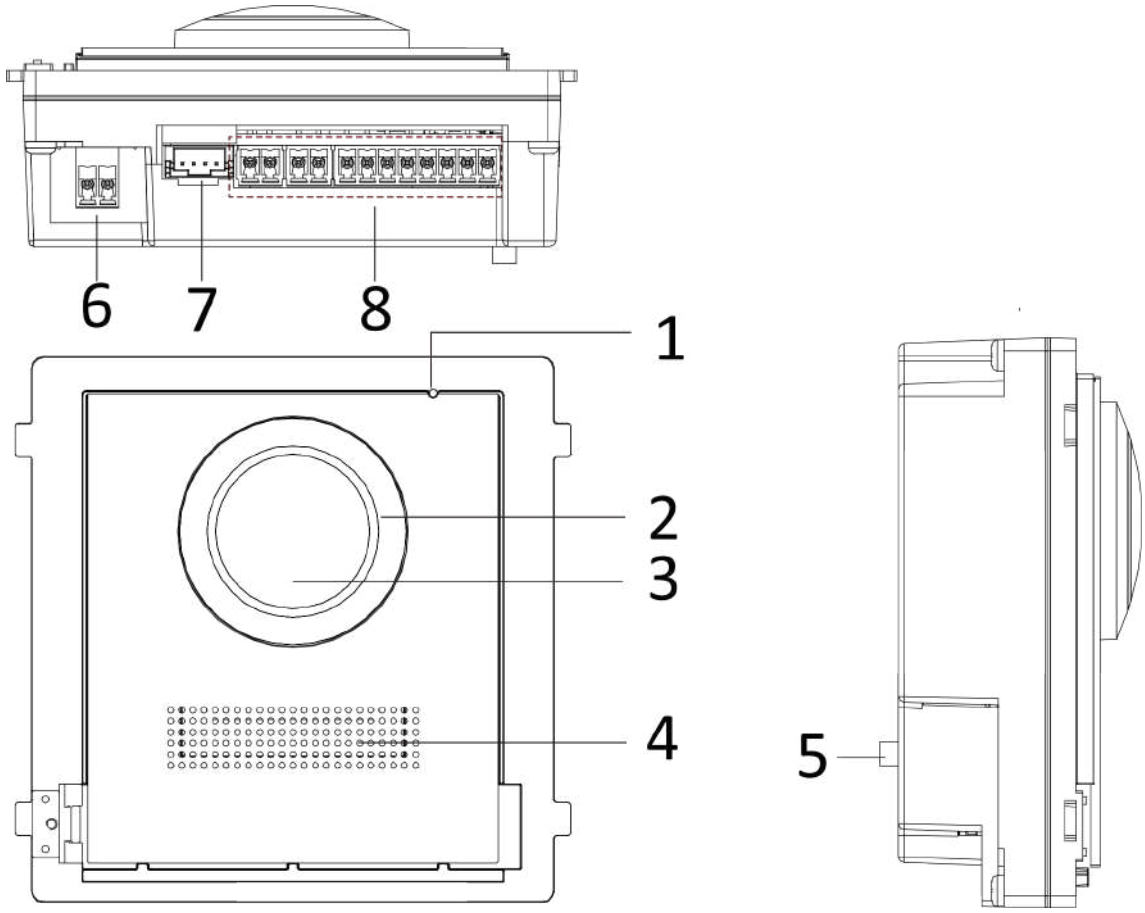

Figure 1-4 Two-Wire Main Unit (without Button) Appearance

Table 1-4 Appearance Description

No.	Description
1	Microphone
2	Low Illumination IR Supplement Light
3	Built-in Camera

No.	Description
4	Loudspeaker
5	TAMPER
6	Two-Wire Interface (24 VDC Power Input)
7	Module-Connecting Interface (output)
8	Terminals

Note

- Nametag area supports insert customized name card. The suggested card size is: 58 (L) x 11.7(W) mm.
- The module connecting interface is used to connect other function module, such as nametag module, keypad module, card reader module, etc. All these modules are known as sub module.

Chapter 2 Configure Sub Module Address

You need to set the sub module address via DIP switch before installation.

Steps

1. Remove the rubber cover on the rear panel of the sub module to expose the DIP switch.

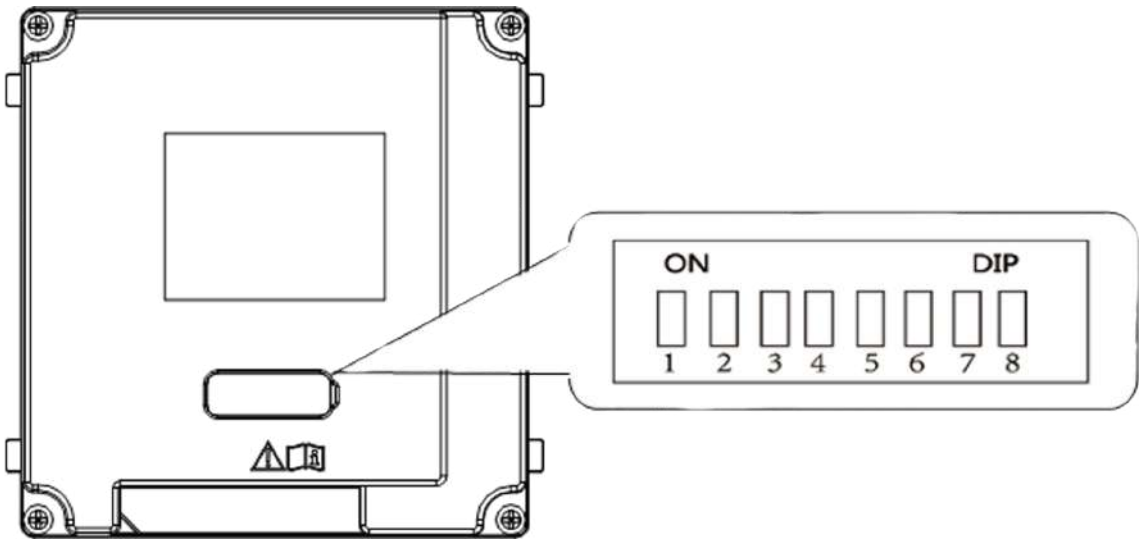

Figure 2-1 DIP Switch

2. Set the sub module address according to the DIP rules, and install the rubber cover back.

Note

- DIP 1, 2, 3, 4 are used to coding the sub module address. DIP 5, 6, 7, 8 are reserved.
- Valid sub module address is from 1 to 8. The address should be unique for connecting to the main unit.
  The sub module address and its corresponding switch status are displayed as below.

Sub Module Address	DIP 1	DIP 2	DIP 3	DIP 4	DIP 5	DIP 6	DIP 7	DIP 8
Module 1	ON	OFF	OFF	OFF	OFF	OFF	OFF	OFF
Module 2	OFF	ON	OFF	OFF	OFF	OFF	OFF	OFF
Module 3	ON	ON	OFF	OFF	OFF	OFF	OFF	OFF
Module 4	OFF	OFF	ON	OFF	OFF	OFF	OFF	OFF
Module 5	ON	OFF	ON	OFF	OFF	OFF	OFF	OFF

Sub Module Address	DIP 1	DIP 2	DIP 3	DIP 4	DIP 5	DIP 6	DIP 7	DIP 8
Module 6	OFF	ON	ON	OFF	OFF	OFF	OFF	OFF
Module 7	ON	ON	ON	OFF	OFF	OFF	OFF	OFF
Module 8	OFF	OFF	OFF	ON	OFF	OFF	OFF	OFF

Chapter 3 Terminal and Wiring

3.1 Terminal Description

The power source should be qualified and meet limited power source or PS2 requirements according to IEC 60950-1 or IEC 62368-1 standard.

Main Unit Terminals

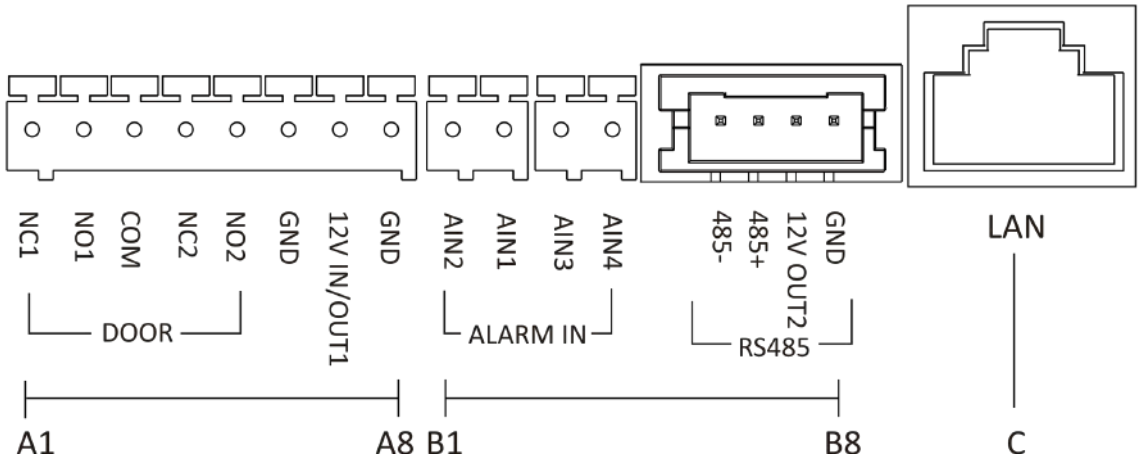

Figure 3-1 Main Unit Terminals

Table 3-1 Descriptions of Terminals and Interfaces

No.	Interface	Description
A1	NC1	Door Lock Relay Output (NC)
A2	NO1	Door Lock Relay Output (NO)
A3	COM	Common Interface
A4	NC2	Door Lock Relay Output (NC)
A5	NO2	Door Lock Relay Output (NO)
A6	GND	Grounding
A7	12 V IN/OUT1	• The power output is 12 V, 500mA. • When the device is powered by PoE, the 12V IN/OUT interface can supply power to the lock.
A8	GND	Grounding
B1	AIN2	For the access of Door Magnetic 2

No.	Interface	Description
B2	AIN1	For the access of Door Magnetic 1
B3	AIN3	For the access of Exit Button 1
B4	AIN4	For the access of Exit Button 2
B5	485-	Module-connecting Interface
B6	485+	
B7	12 V OUT2	
B8	GND	
C	LAN	PoE Network Interface(Supports IEEE 802.3af)

Table 3-2 Power Supply

Power Supply	Door Station Power Output
PoE (802.3af)	DC 12V OUT1/DC 12V OUT2 6 W MAX in total
DC 12 V	DC 12V OUT2 18 W MAX

Two-Wire Main Unit Terminal

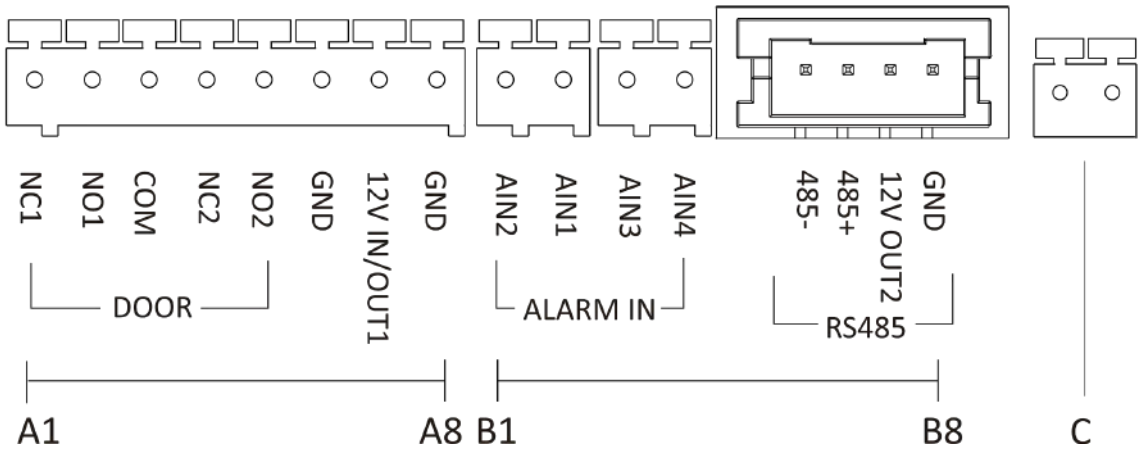

Figure 3-2 Two-Wire Main Unit Terminal

Table 3-3 Descriptions of Terminals and Interfaces

No.	Interface	Description
A1	NC1	Door Lock Relay Output (NC)
A2	NO1	Door Lock Relay Output (NO)
A3	COM	Common Interface
A4	NC2	Door Lock Relay Output (NC)
A5	NO2	Door Lock Relay Output (NO)
A6	GND	Grounding
A7	12 V IN/OUT1	The power output is 12 V, 500mA.
A8	GND	Grounding
B1	AIN2	For the access of Door Magnetic 2
B2	AIN1	For the access of Door Magnetic 1
B3	AIN3	For the access of Exit Button 1
B4	AIN4	For the access of Exit Button 2
B5	485-	Module-connecting Interface
B6	485+	
B7	12 V OUT2	
B8	GND	
C	Two-Wire Interface	Two-Wire Interface

Table 3-4 Power Supply

Power Supply	Distributor Model	Distributor Power Output	Door Station Power Output
DC 24 V	DS-KAD704Y	DC 24 V OUT 8 W MAX	DC 12V OUT1/DC 12V OUT2 3 W MAX in total
	DS-KAD706Y	DC 24 V OUT 16 W MAX	DC 12V OUT1/DC 12V OUT2 10 W MAX in total
	DS-KAD706Y-P(C)	DC 24 V OUT 16 W MAX	DC 12V OUT1/DC 12V OUT2

Power Supply	Distributor Model	Distributor Power Output	Door Station Power Output
			10 W MAX in total
DC 12 V	/	/	DC 12V OUT2 18 W MAX

Sub Module Terminal (Except Touch-Display Module)

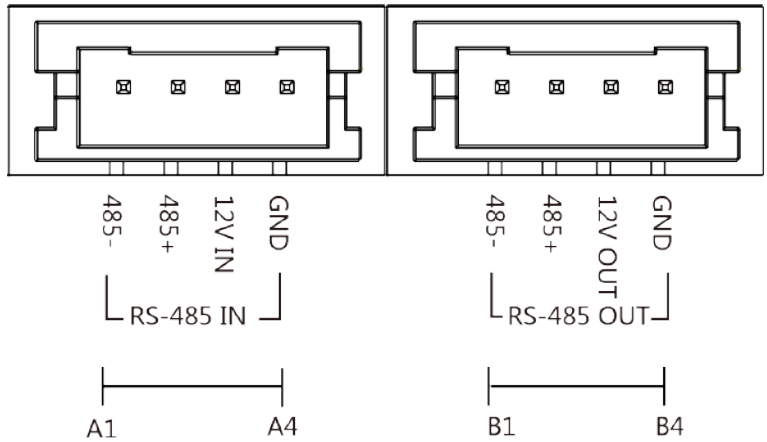

Figure 3-3 Sub Module Terminal (Except Touch-Display Module)

Table 3-5 Description

No.	Interface	Description
A1	485-	Module-Connecting Interface (Input)
A2	485+	
A3	12V IN	
A4	GND	
B1	485-	Module-Connecting Interface (Output)
B2	485+	
B3	12V OUT	
B4	GND	

Touch-Display Module

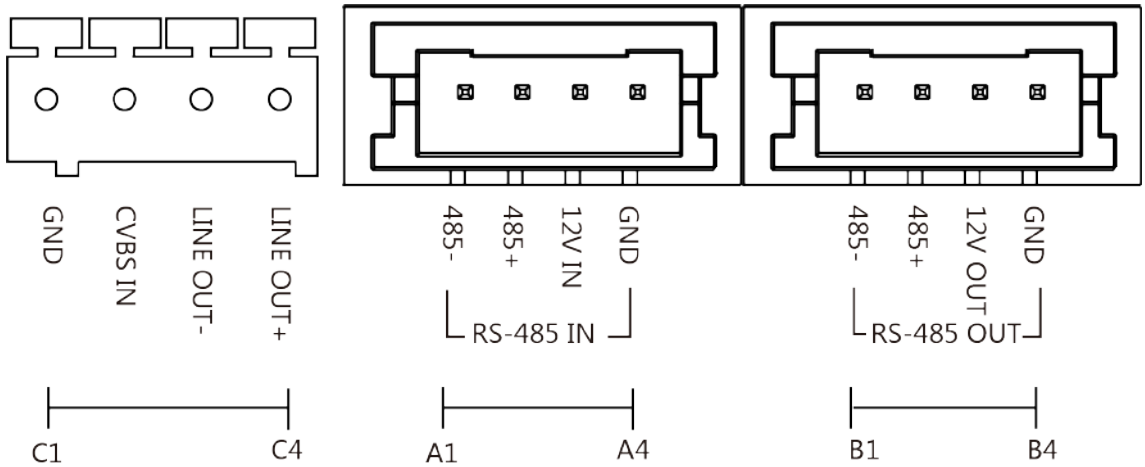

Figure 3-4 Touch-Display Module

Table 3-6 Description

No.	Interface	Description
A1	485-	Module-Connecting Interface (Input)
A2	485+	
A3	12V IN	
A4	GND	
B1	485-	Module-Connecting Interface (Output)
B2	485+	
B3	12V OUT	
B4	GND	
C1	GND	Grounding Interface
C2	CVSB IN	Composite Video Broadcast Signal Input (Reserved)
C3	LINEOUT-	Audio Output (Reserved)
C4	LINEOUT+	

3.2 Module Door Station Wiring

3.2.1 Door Lock Wiring

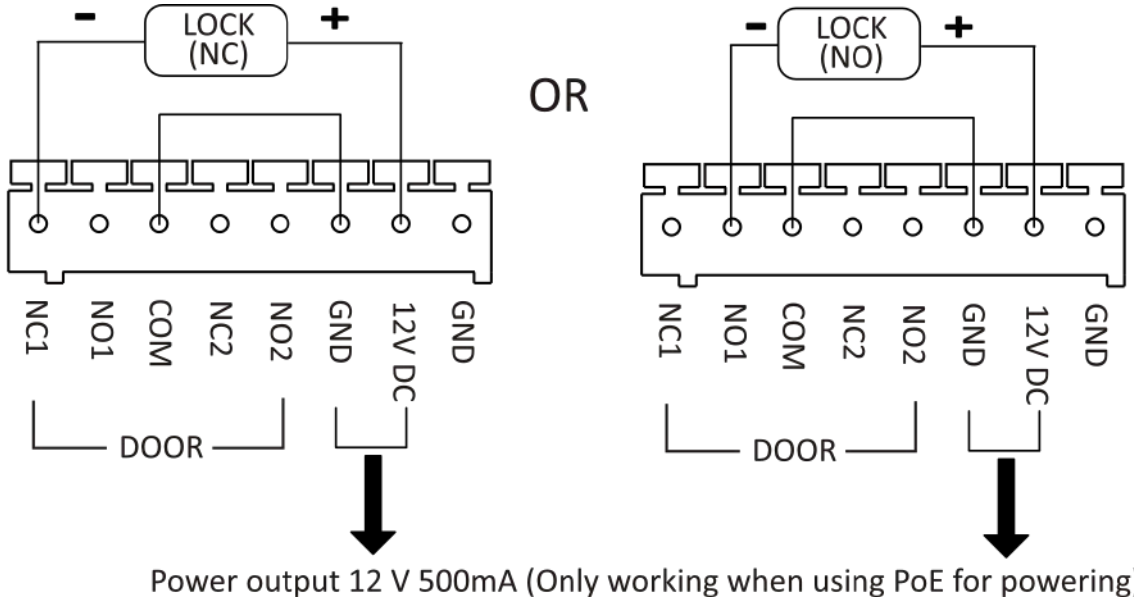

Figure 3-5 Door Lock Wiring

3.2.2 Door Contact Wiring

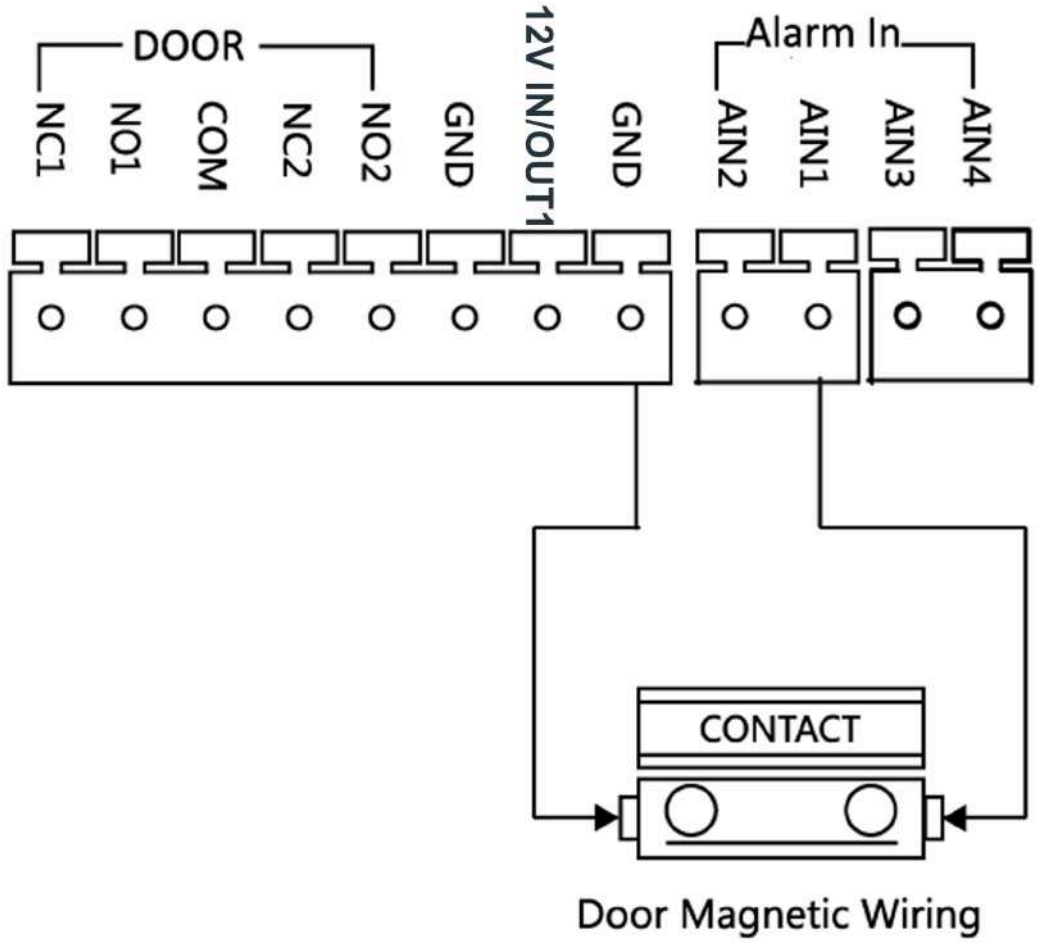

Figure 3-6 Door Contact Wiring

Note

AIN1 and AIN2 are defaulted to connect door contact. Door contact connected to AIN1 detects status of the lock that connected to NC1/NO1; Door contact connected to AIN2 detects the status of the lock connected to NC2/NO2.

3.2.3 Exit Button Wiring

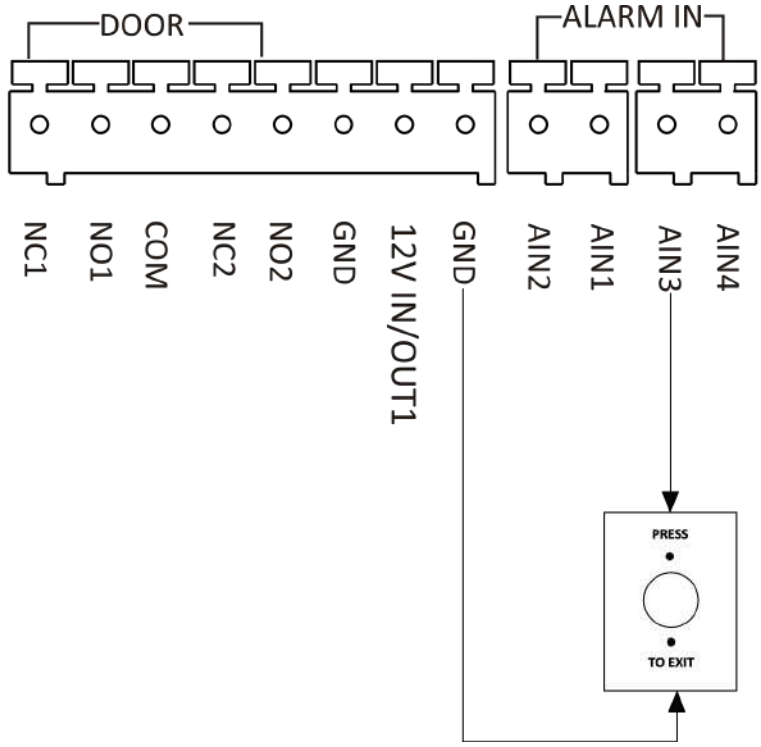

Figure 3-7 Exit Button Wiring

Note

AIN3 and AIN4 are set as default for connecting exit button. Exit button connected to AIN3 opens the lock connected to NC1/NO1; Exit button connected to AIN4 controls the lock that connected to NC2/NO2.

Chapter 4 Installation

Note

Two-Wire Video Intercom Main Unit and Video Intercom Main Unit share the same installation methods. Therefore, the following installation procedures will take Video Intercom Main Unit as an example.

Note

- Make sure the device in the package is in good condition and all the assembly parts are included.
- Sub module must work along with the main unit.
- Set the sub module address before start the installation steps.
- Make sure the place for surface mounting is flat.
- Make sure all the related equipment is power-off during the installation.
- Tools that you need to prepare for installation:
  Drill (ø6), cross screwdriver (PH1*150 mm), and gradienter.

4.1 One-Module Installation

4.1.1 One-Module Surface Mounting

Before You Start

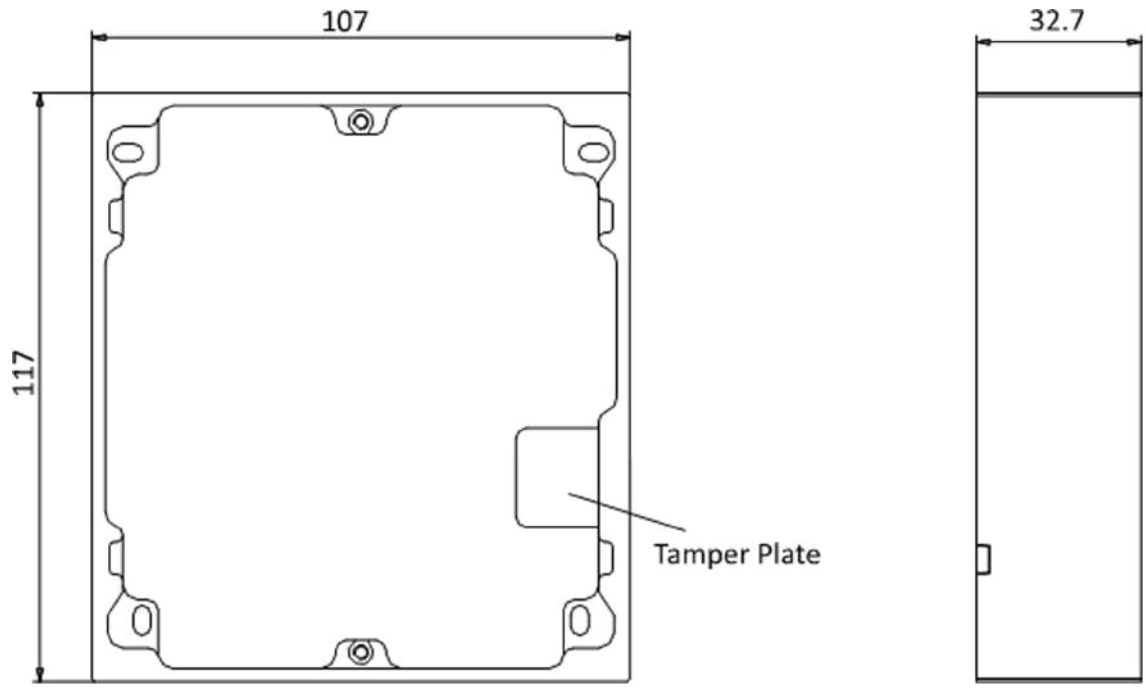

Figure 4-1 Mounting Frame

Note

- The dimension of one module mounting frame (W × H × D) is: 117 mm × 107 mm × 32.7 mm.
- The dimensions above are for reference only. The actual size can be slightly different from the theoretical dimension.

Steps

1. Paste the installation Sticker 1 onto the wall. Make sure the sticker is placed horizontally via measuring with the gradienter.
2. Drill 4 holes according to the screw holes on the sticker.

Note

- The suggested size of hole is 6 (diameter) × 25 (depth) mm.
- The suggested length of cables left outside is 100 mm.

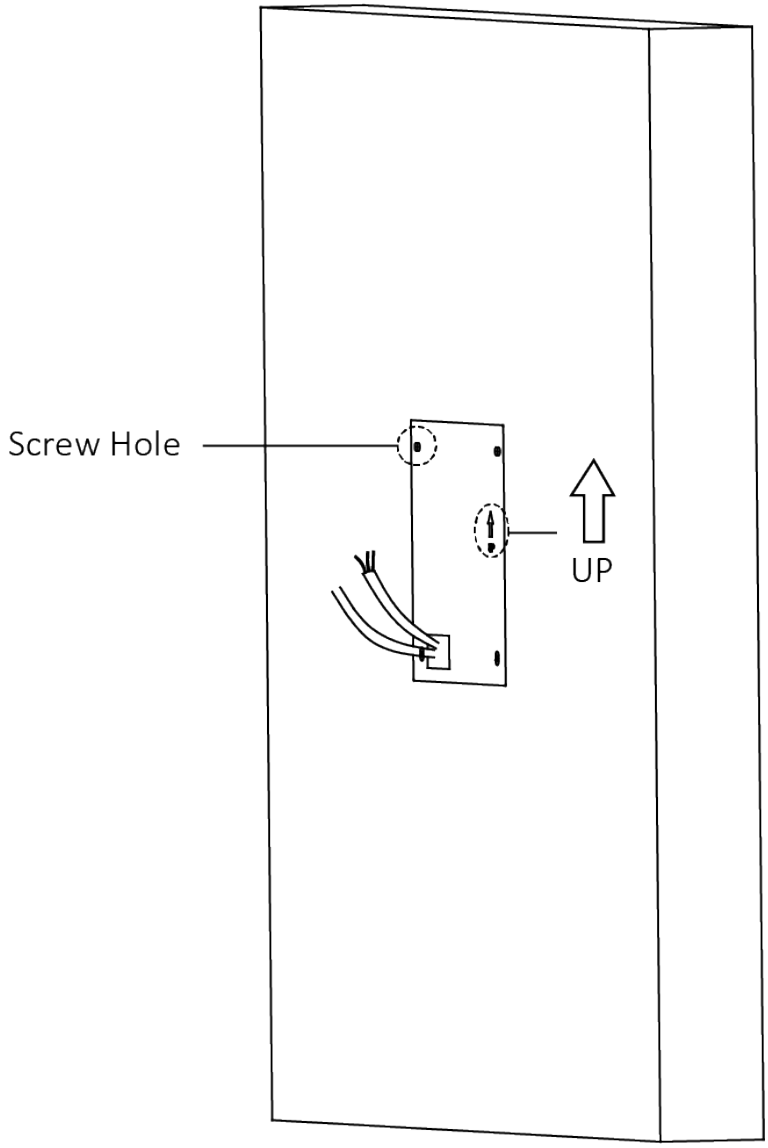

Figure 4-2 Drill Screw Holes

3. Remove the stricker and insert the expansion sleeves into the screw holes.

4. Fix the mounting frame onto the wall with 4 expansion bolts.

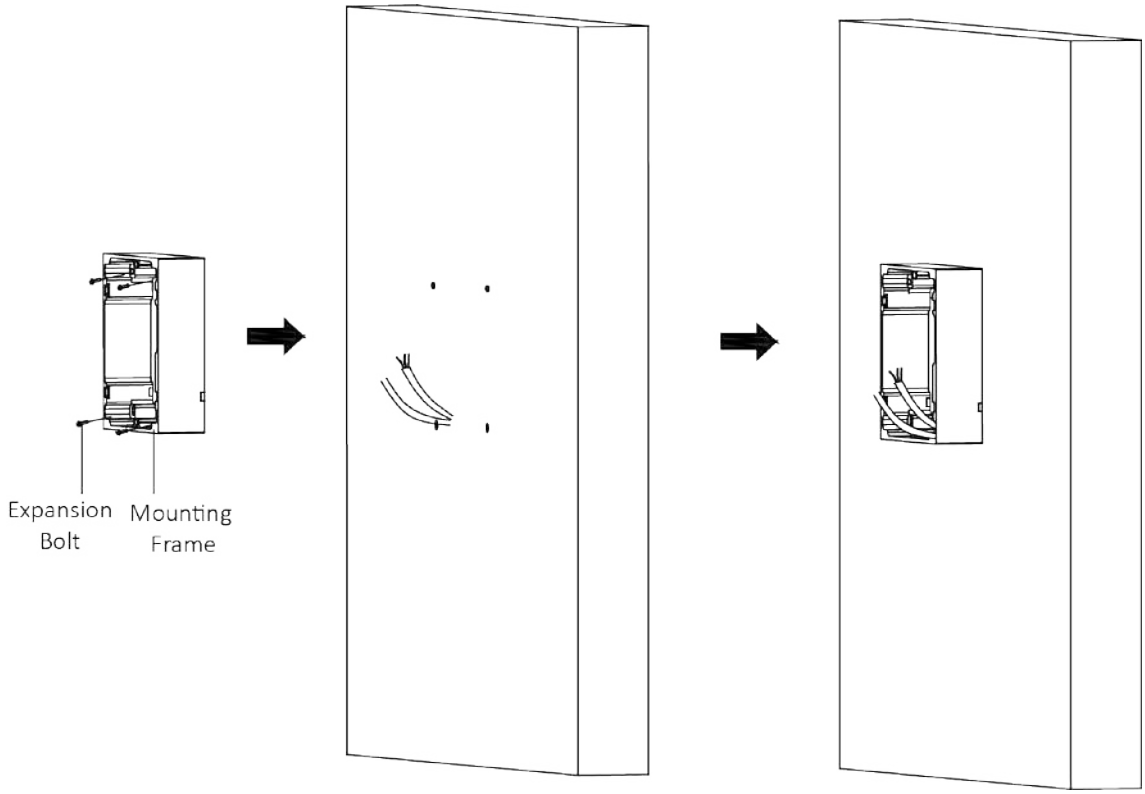

Figure 4-3 Fix the Mounting Frame

5. Connect the cables to the corresponding interfaces of the main unit and insert the main unit into the frame.

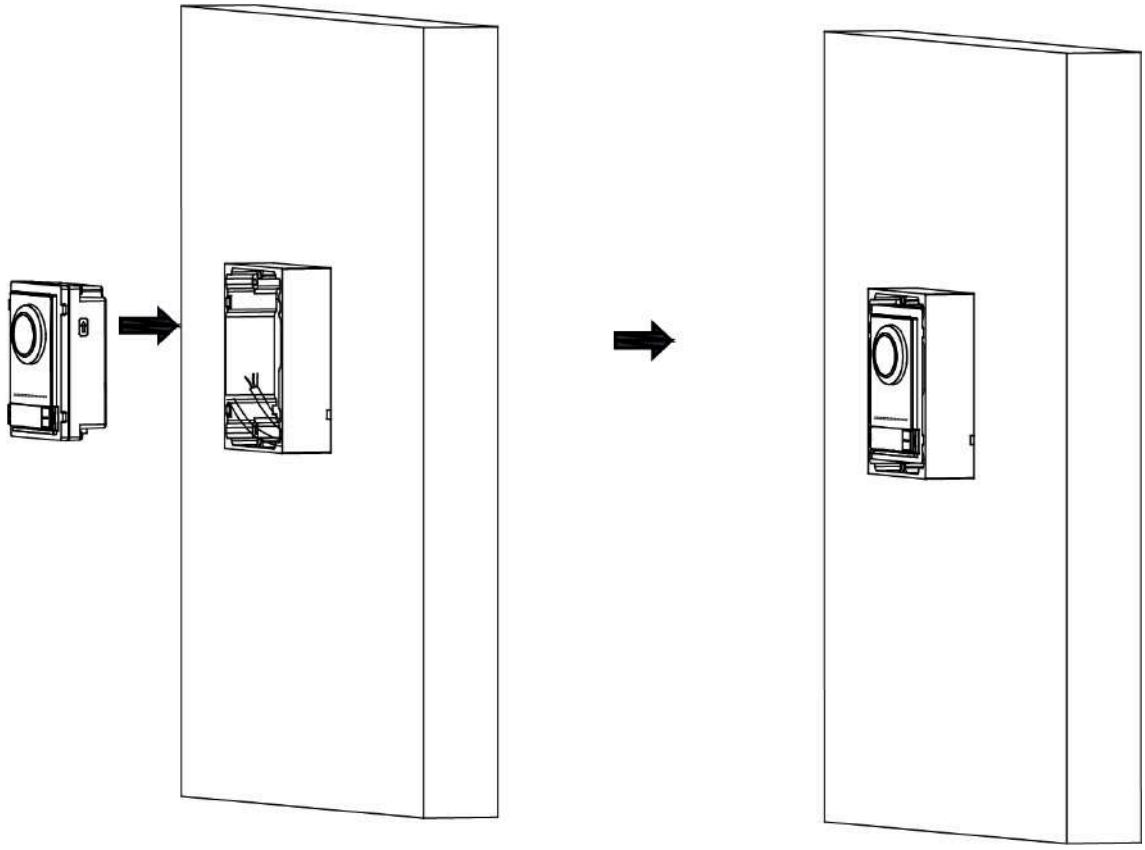

Figure 4-4 Insert the Main Unit

6. Fix the cover onto the frame.

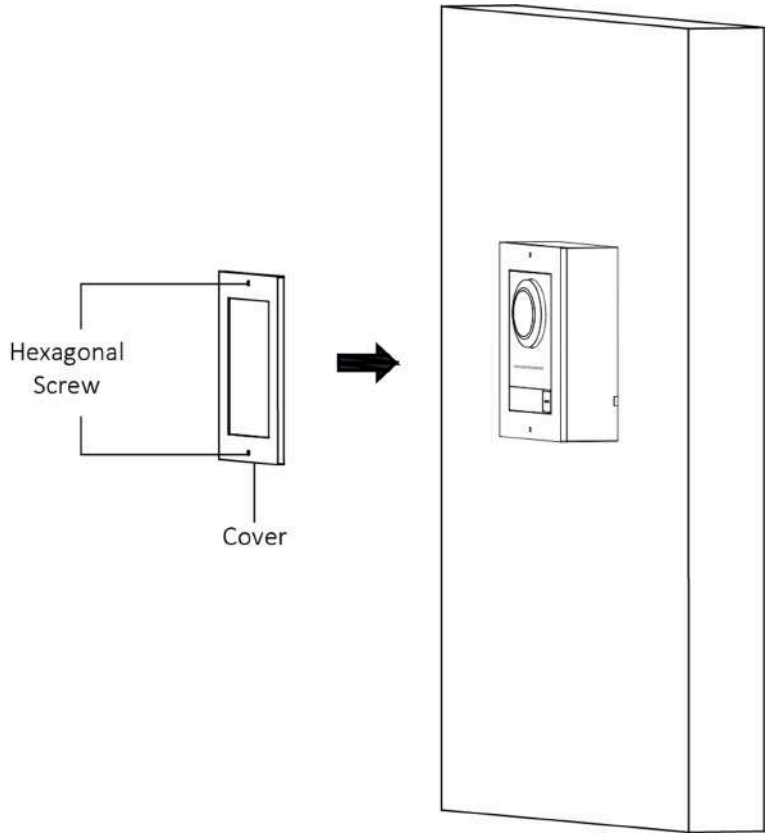

Figure 4-5 Fix the Cover

4.1.2 One-Module Flush Mounting

Before You Start

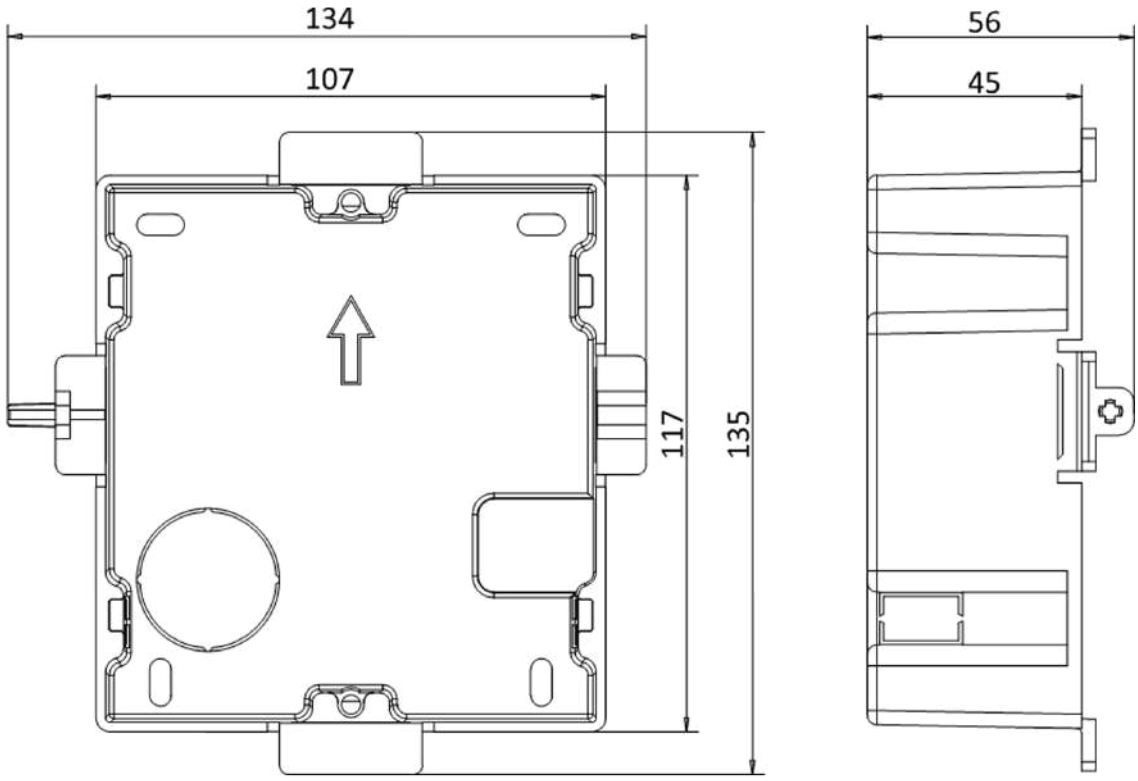

Figure 4-6 Front and Side View of the Gang Box

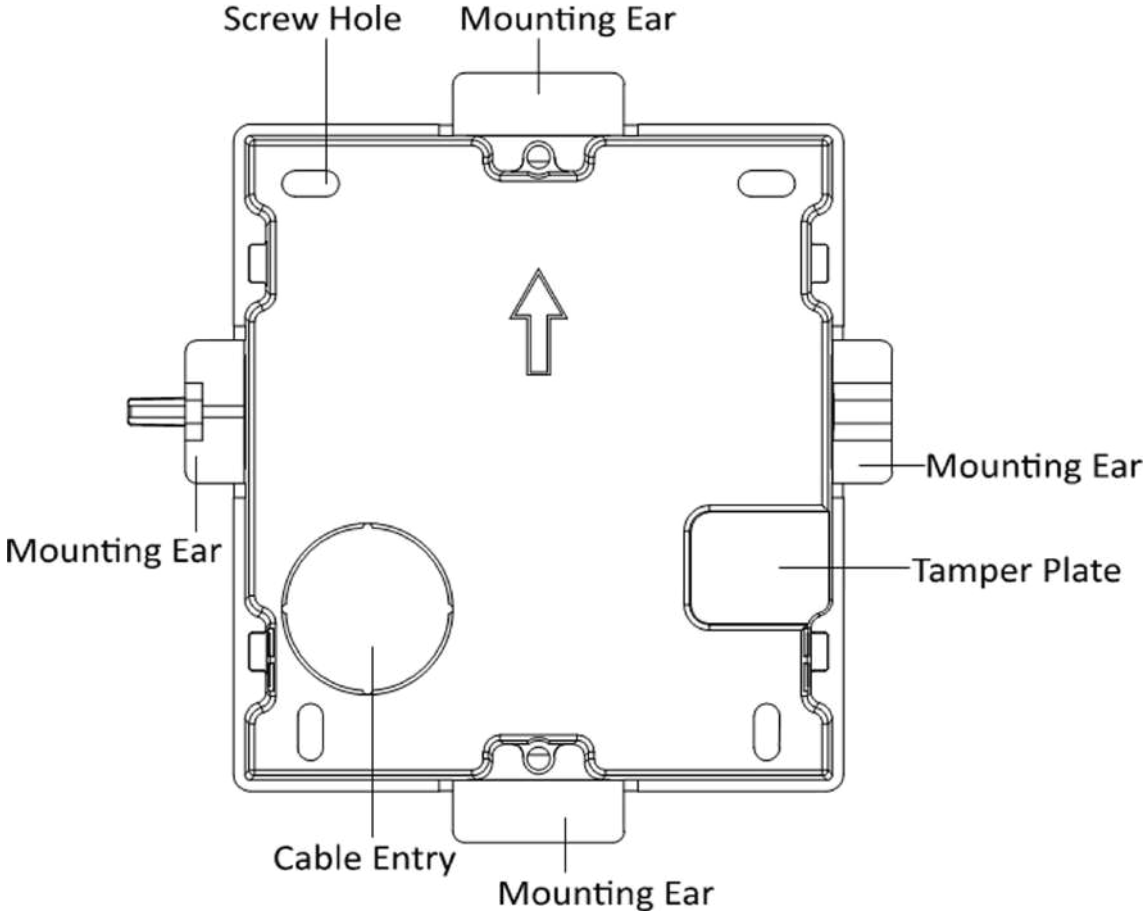

Figure 4-7 Gang Box

Note

The dimension of one-module gang box is: 115 (W) × 134 (H) × 56 (D) mm. The dimension is for reference only.

Steps

1. Drill an installation hole, and pull the cables out.

Note

- The suggested dimension of installation hole is 118 (W) × 108 (H) × 45.5 (D) mm.
- The suggested length of cables left outside is 100 mm.

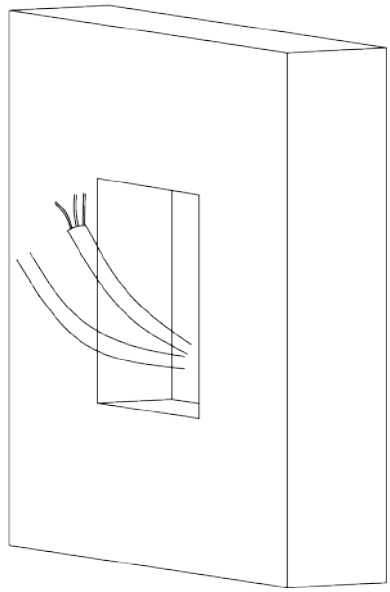

Figure 4-8 Drill Installation Hole

2. Remove the plastic sheet of the cable entry.

3. Mark the gang box screw holes on the wall.

1) Route the cables through the gang box hole.
2) Insert the gang box into the installation hole.
3) Mark the gang box screw holes' position with a marker, and take out the gang box.

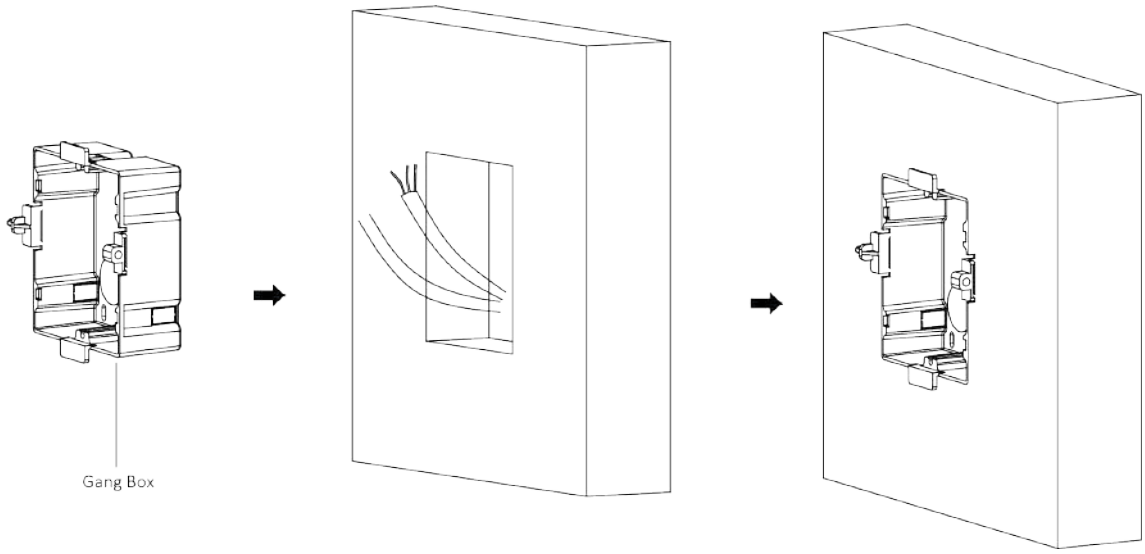

Figure 4-9 Mark the Screw Holes

4. Drill 4 holes according to marks on the wall, and insert the expansion sleeves into the screw holes.

Note

The suggested size of the hole is 6 (diameter) × 45 (depth) mm.

5. Route the cables through the gang box hole. Insert the gang box into the installation hole. Fix the gang box with 4 expansion bolts.

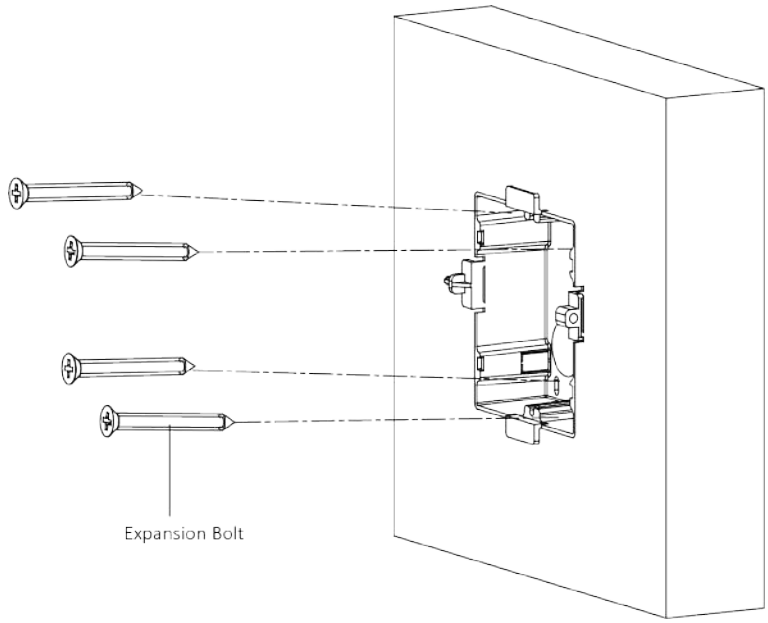

Figure 4-10 Fix the Gang Box

6. Fill the gap between the gang box and the wall with concrete. Remove the 4 mounting ears with tool after concrete is dry.

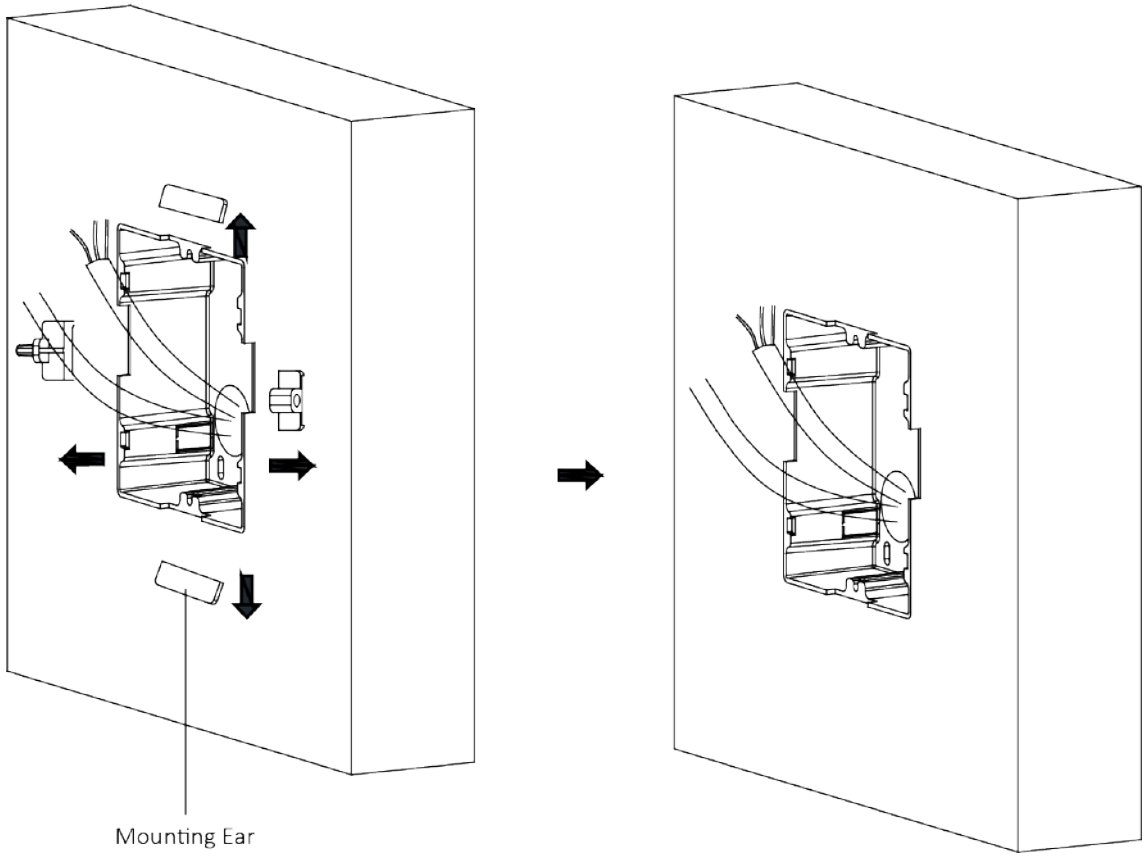

Figure 4-11 Remove the Mounting Ears

7. Connect the cables to the corresponding interfaces of the main unit and insert the unit into the gang box.

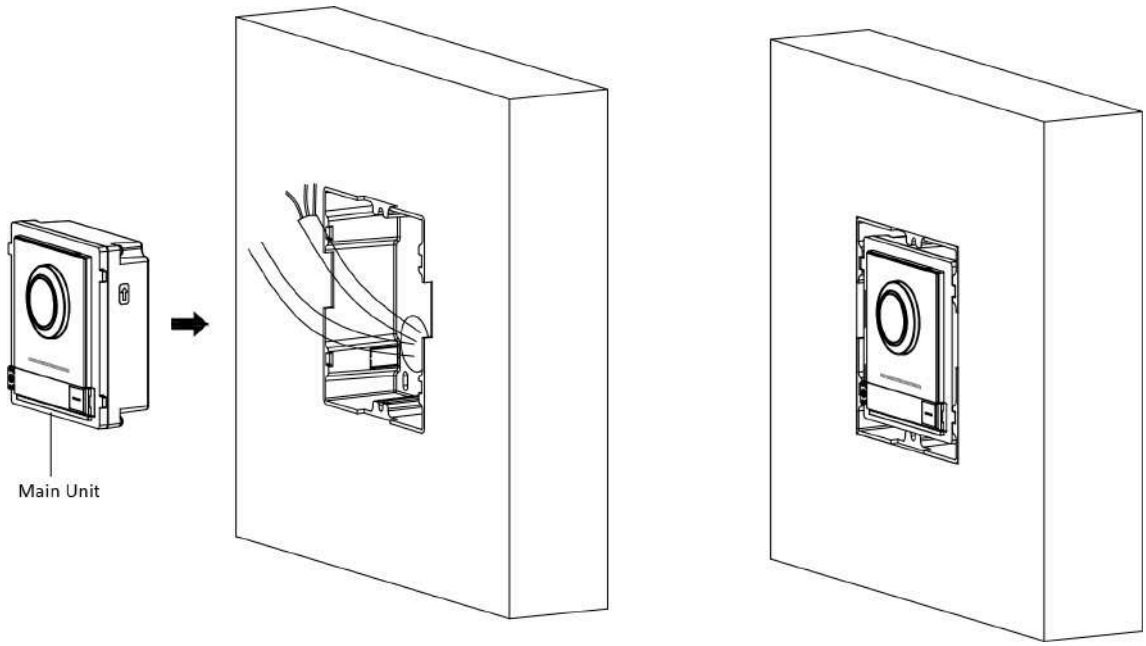

Figure 4-12 Insert the Main Unit

8. Fix the cover and the main unit with 2 socket head cap screws by using a hexagon wrench (supplied).

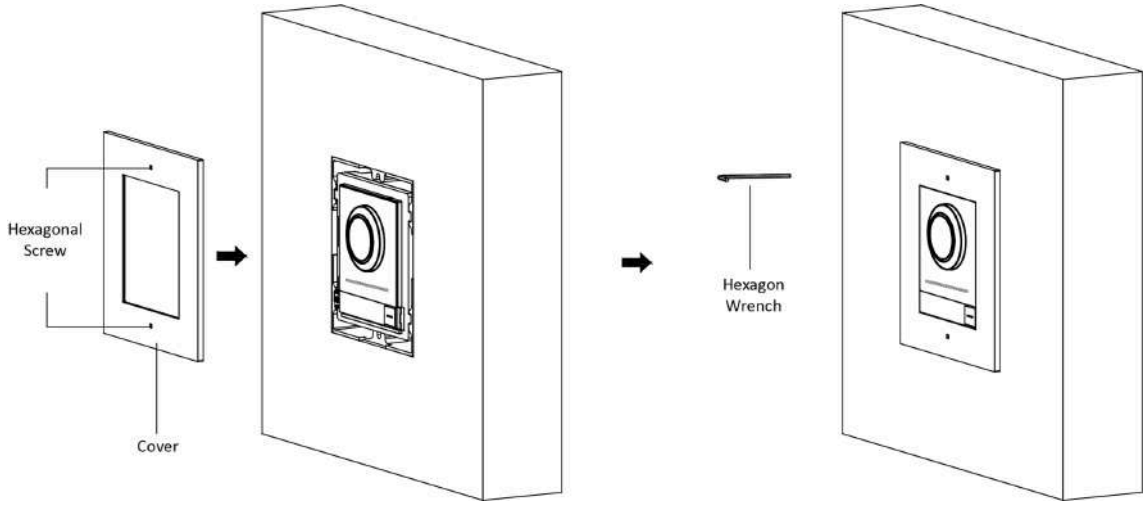

Figure 4-13 Fix the Cover

4.2 Two-Module Installation

4.2.1 Two-Module Surface Mounting

Before You Start

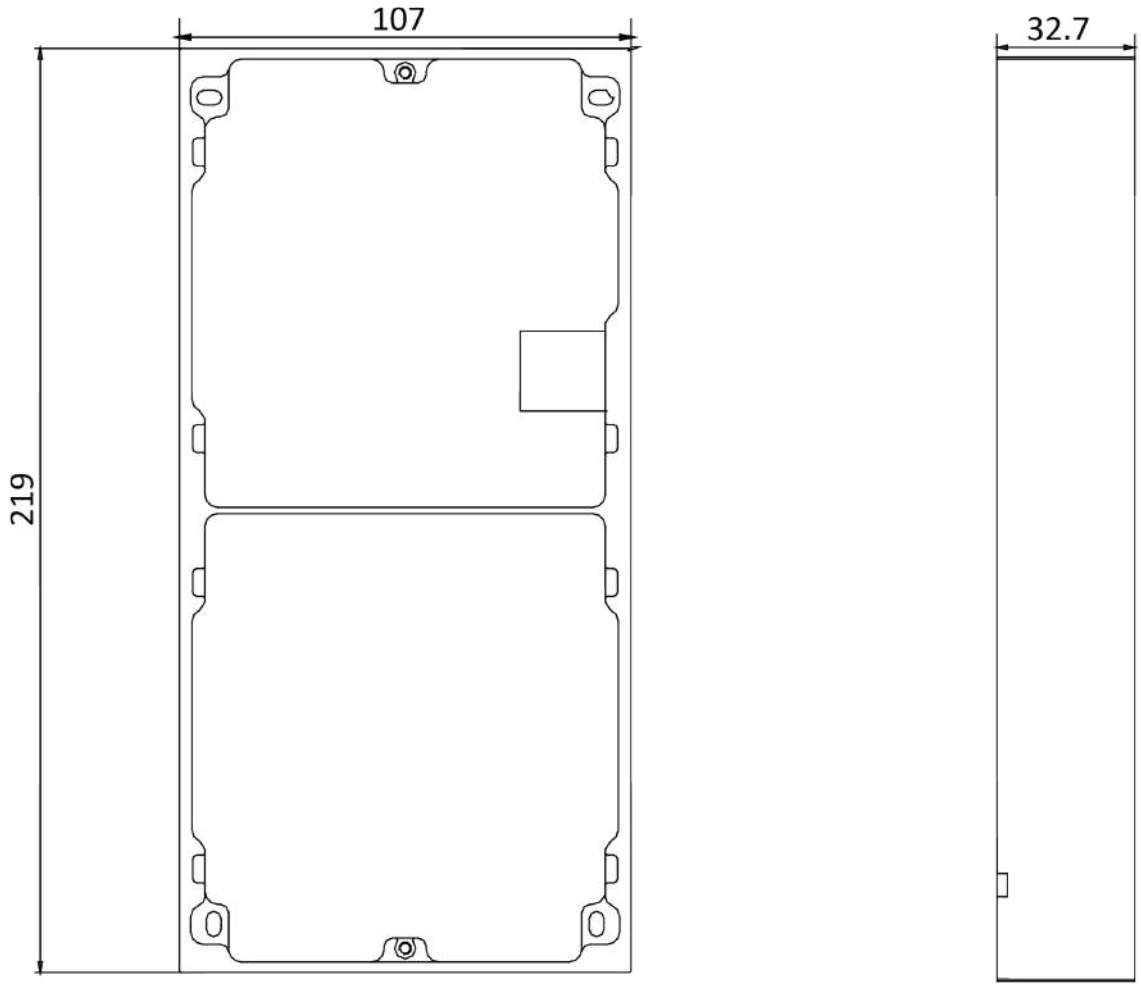

Figure 4-14 Mounting Frame

Note

- The dimension of two-module mounting frame (W × H × D) is: 219 mm × 107 mm × 32.7 mm.
- The dimensions above are for reference only. The actual size can be slightly different from the theoretical dimension.

Steps

1. Paste the installation Sticker 1 onto the wall. Make sure the sticker is placed horizontally via measuring with the gradienter.
2. Drill 4 holes according to the screw holes on the sticker. The suggested size of hole is 6 (diameter) × 25 (depth) mm. The suggested length of cables left outside is 270 mm.

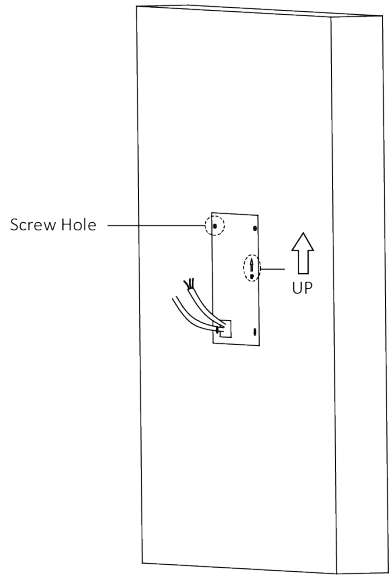

Figure 4-15 Drill Screw Holes

3. Remove the sticker and insert the expansion sleeves into the screw holes.
4. Fix the mounting frame onto the wall with 4 expansion bolts.

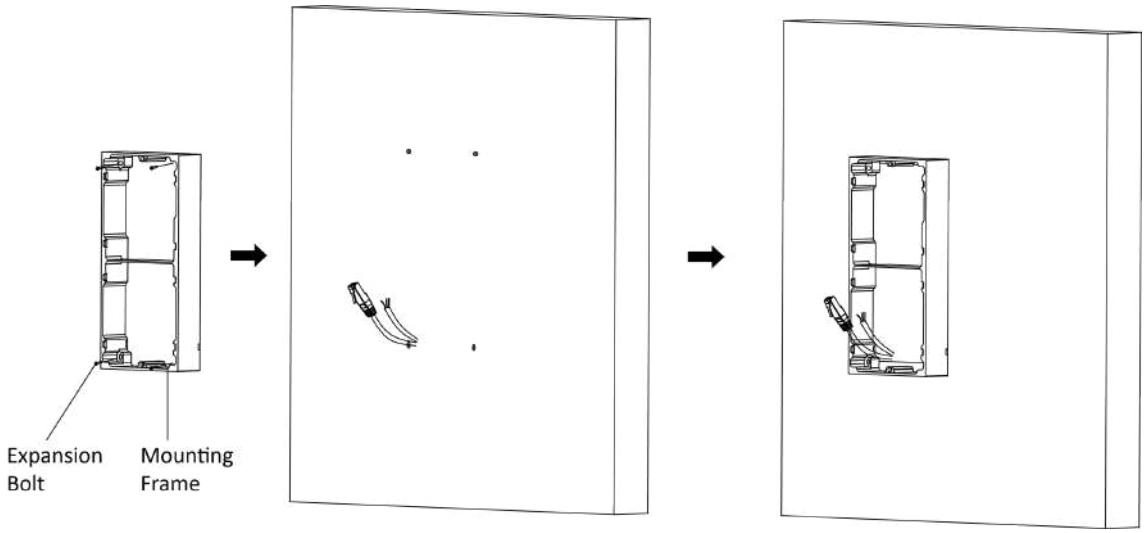

Figure 4-16 Fix the Mounting Frame

5. Thread the module-connecting line across the thread hole of the frame. Pass the main unit connecting lines across the thread hole to the upper grid.

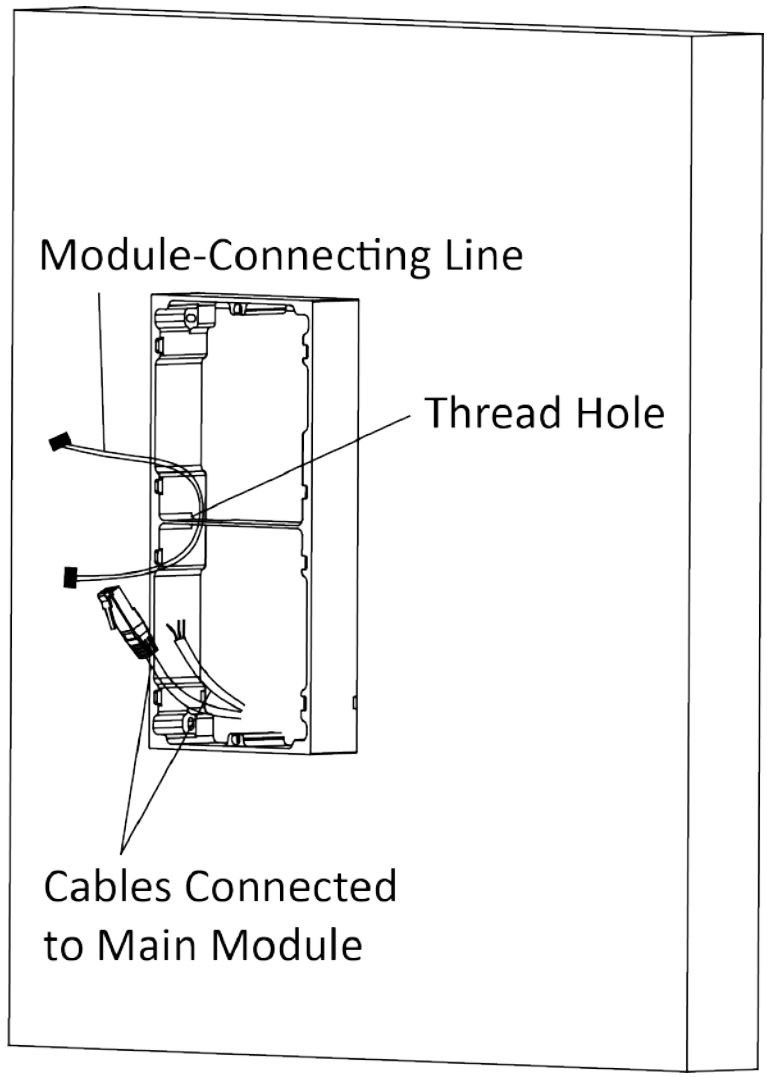

Figure 4-17 Placement of Lines

6. Connect the cables.

1) Connect the lines and module-connecting line to the corresponding interfaces of the main unit, then place the main unit into the upper grid.
2) Connect the other end of the module-connecting line to the input interface of the sub module.
3) Organize the cable with cable tie in the package. The suggested cable connection picture as shown below.

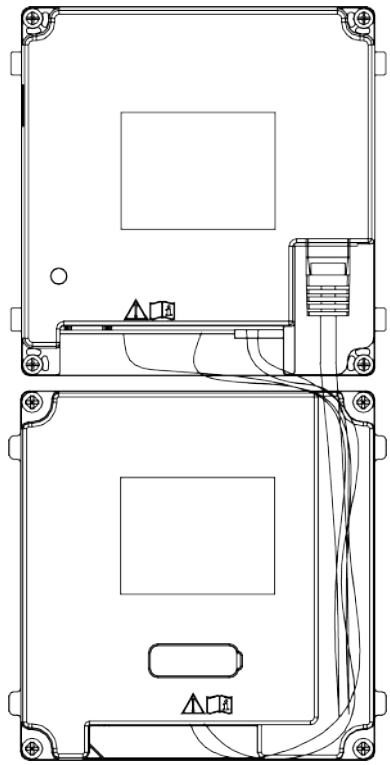

Figure 4-18 Line Connection Effect Picture

7. Insert the modules into the frame after wiring. The main unit must be placed in the top grid.

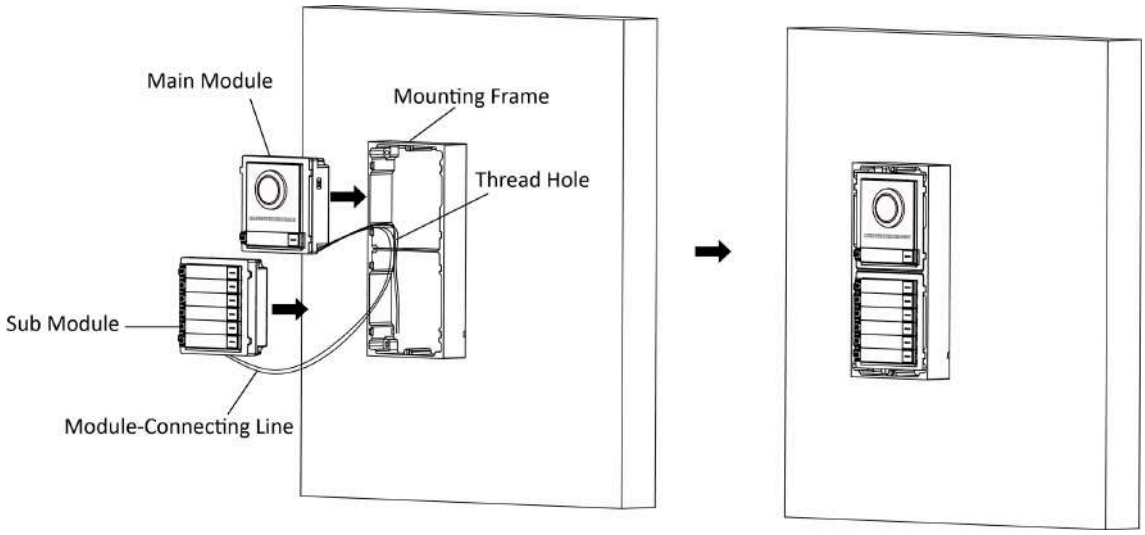

Figure 4-19 Insert the Modules

8. Use the hexagon wrench in the package to fix the cover onto the frame.

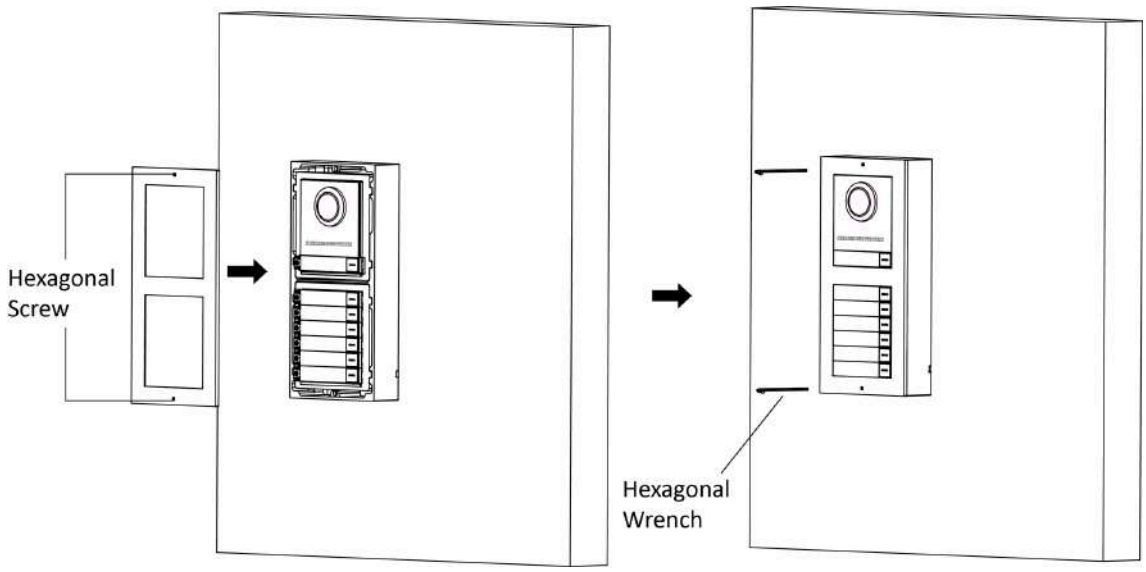

Figure 4-20 Fix the Cover

4.2.2 Two-Module Flush Mounting

Before You Start

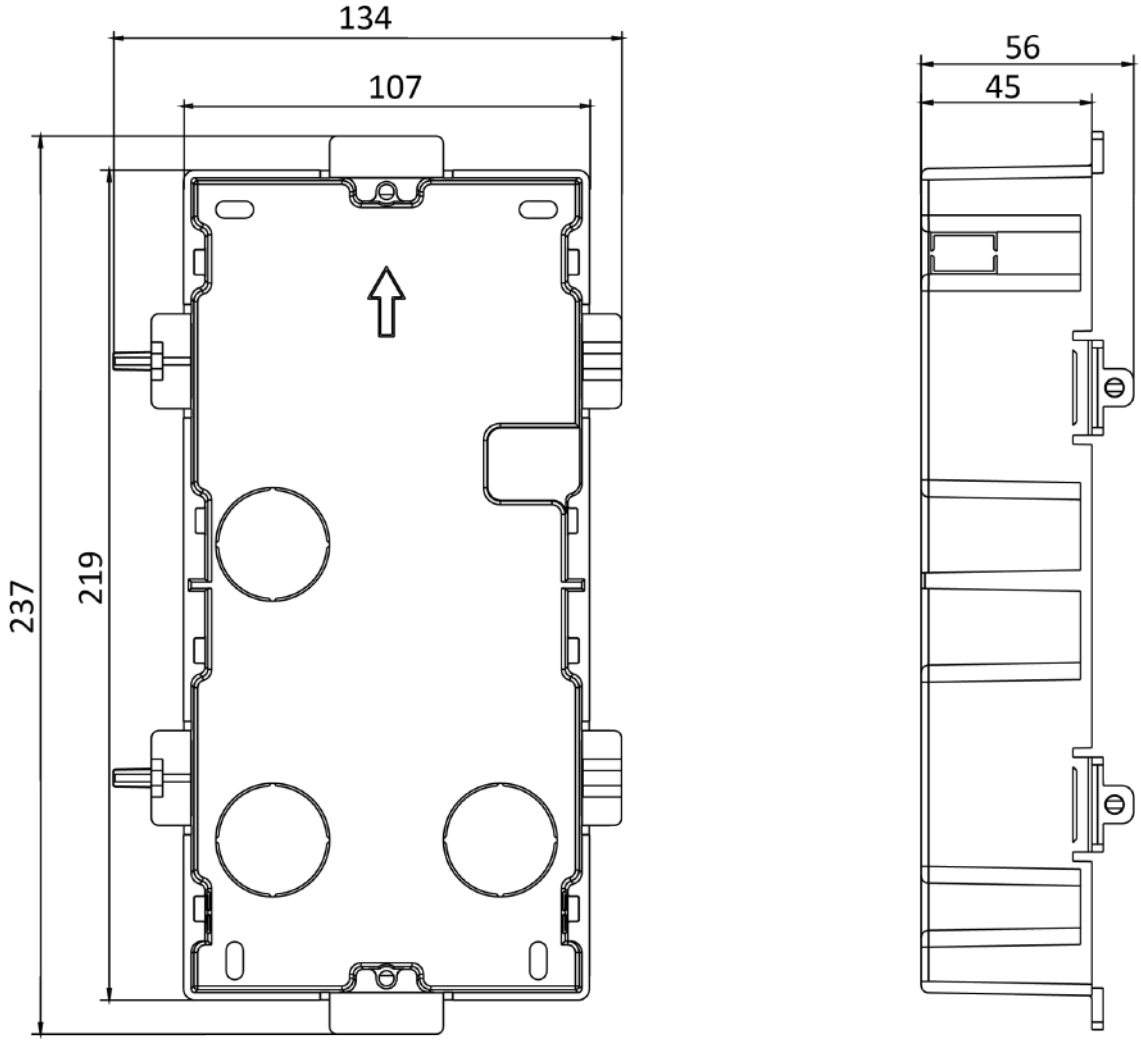

Figure 4-21 Gang Box

Note

The dimension of two-module gang box is: 237 (W) × 134 (H) × 56 (D) mm. The dimension is for reference only.

Steps

1. Drill the installation hole, and pull the cable out.

Note

- The suggested dimension of installation hole is 220 (W) × 108 (H) × 45.5 (D) mm.
- The suggested length of cables left outside is 270 mm.

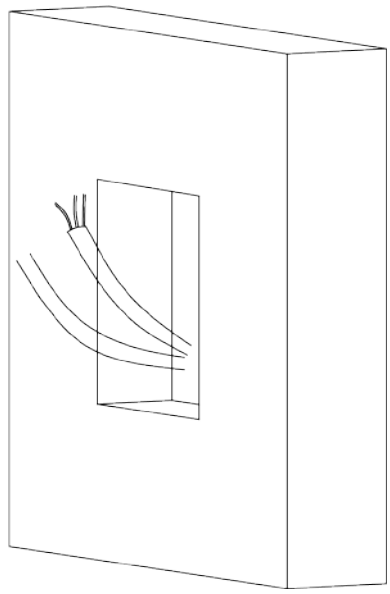

Figure 4-22 Drill the Installation Hole

2. Select a cable entry and remove the plastic sheet.

3. Mark the gang box screw holes on the hole.

1) Routs the cables through the gang box hole.
2) Insert the gang box into the installation hole.
3) Mark the gang box screw holes' position with a marker, and take out the gang box.

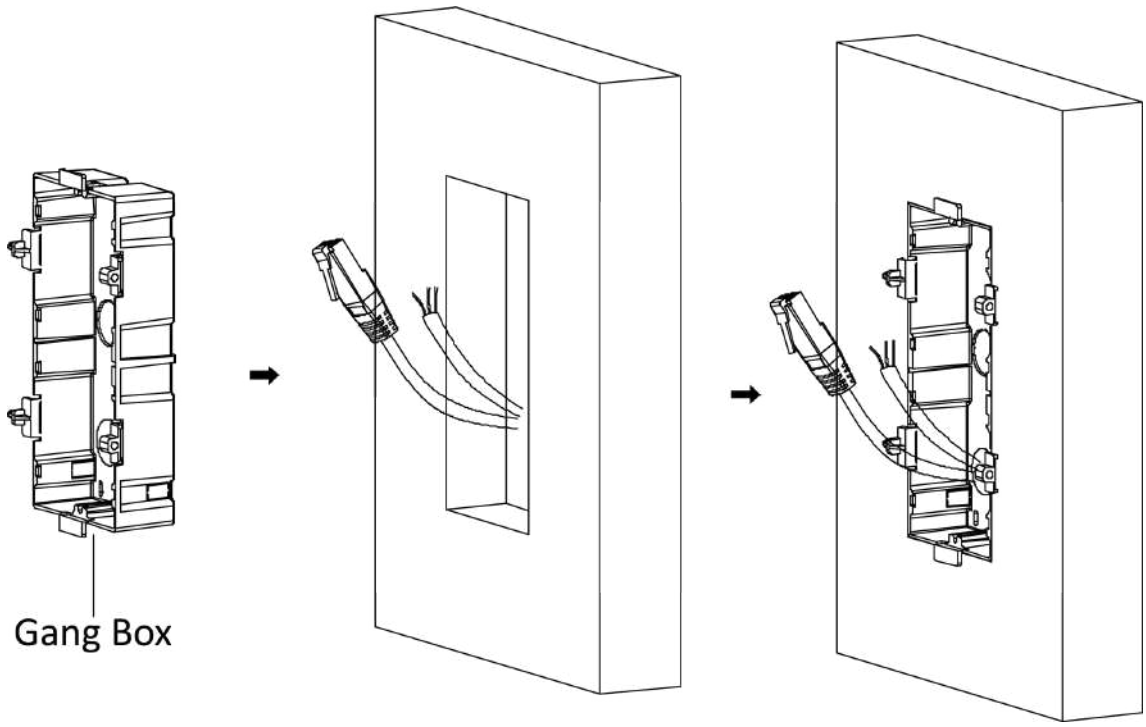

Figure 4-23 Mark the Screw Holes

4. Drill 4 holes according to the marks on the wall, and insert the expansion sleeves into the screw holes. The suggested size of hole is 6 (diameter) × 45 (depth) mm.
5. Fix the gang box with 4 expansion bolts.

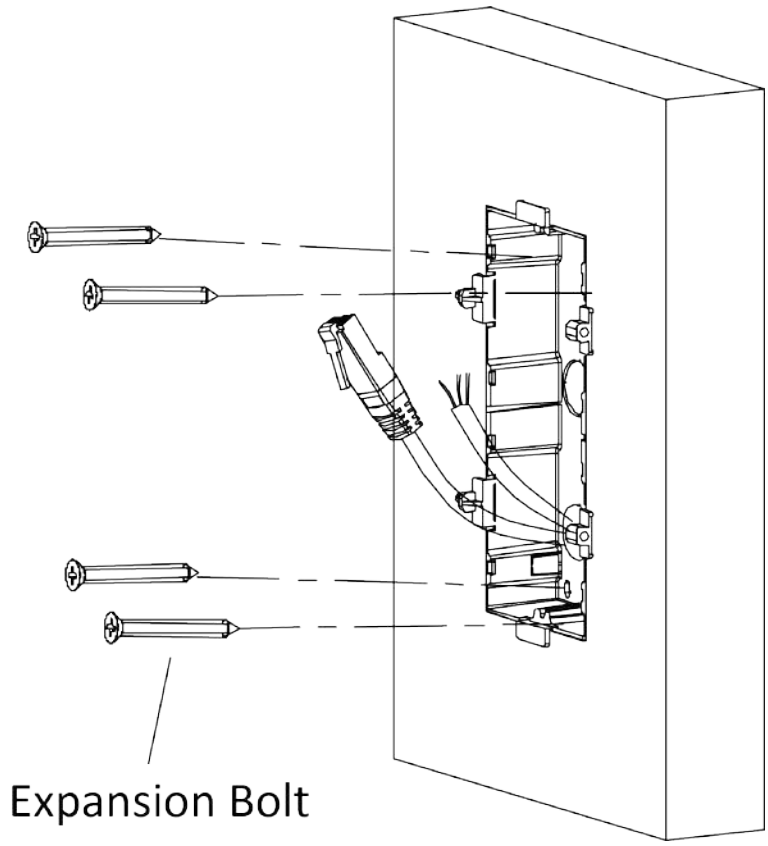

Figure 4-24 Fix the Gang Box

6. Fill the gap between the gang box and the wall with concrete. Remove the mounting ears with tool after concrete is dry.

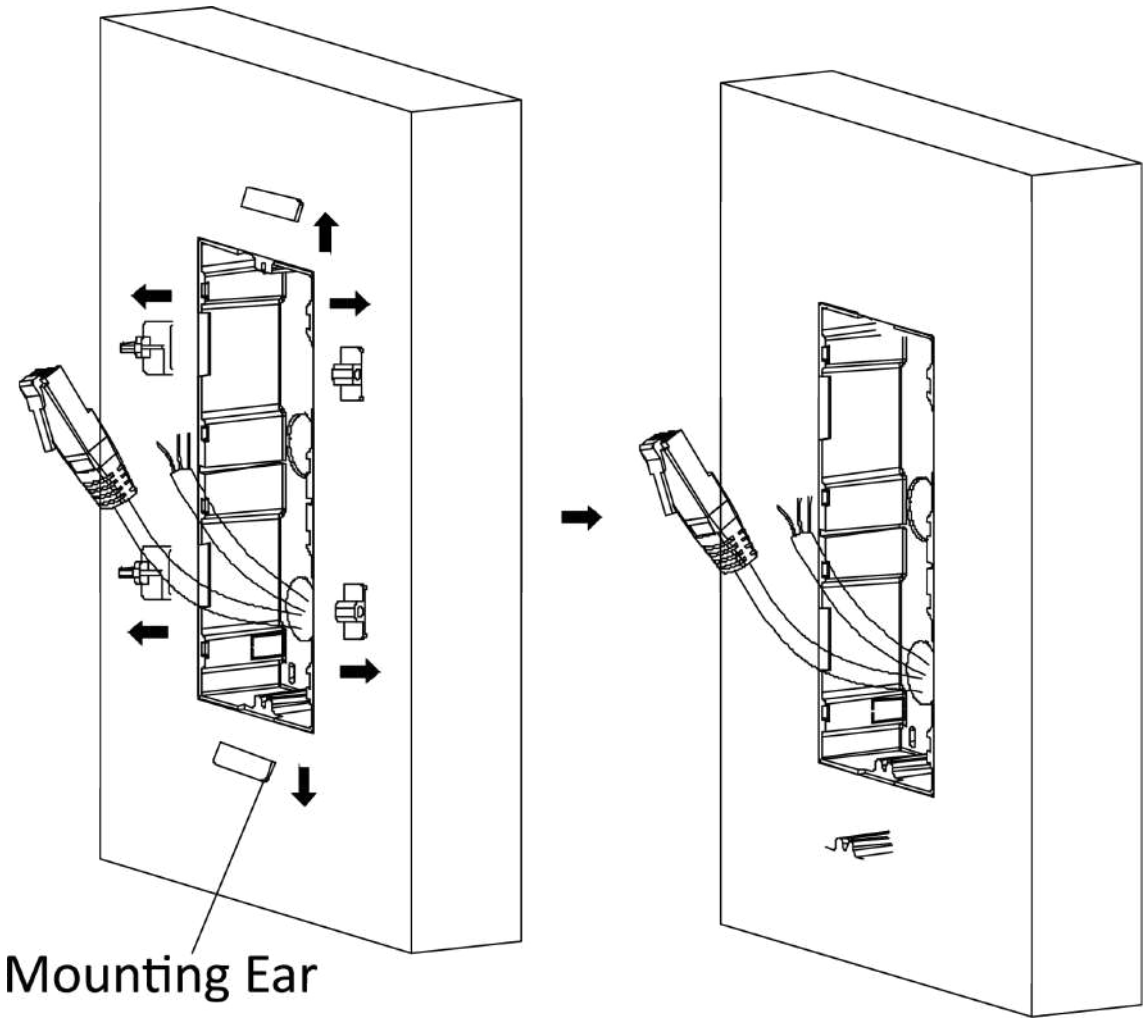

Figure 4-25 Remove the Mounting Ears

7. Connect cables and insert the modules.

1) Connect Cable 1 and one end of Cable 2 to the corresponding interfaces of the main unit, then insert the main unit into the upper grid.
2) Connect the other end of Cable 2 to the input interface of the sub module. Insert it into the lower grid.

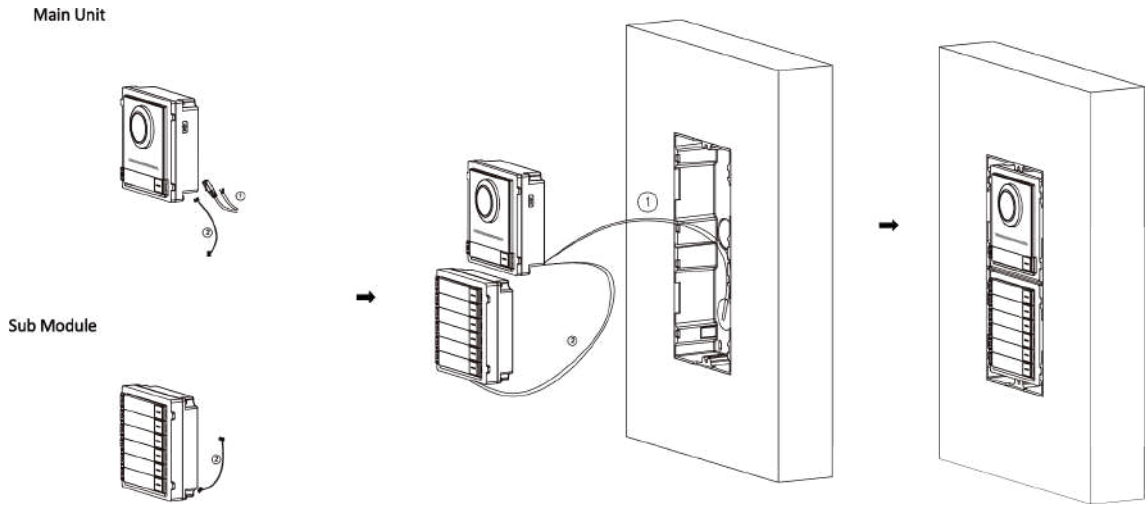

Figure 4-26 Connect Cables and Insert the Modules

Note

Cable 1 refers to the cables pulled out from the wall that connected to the main unit. Cable 2 refers to the module-connecting line in the accessory package.

8. Fix the cover with 2 socket head cap screws by using a hexagon wrench (supplied).

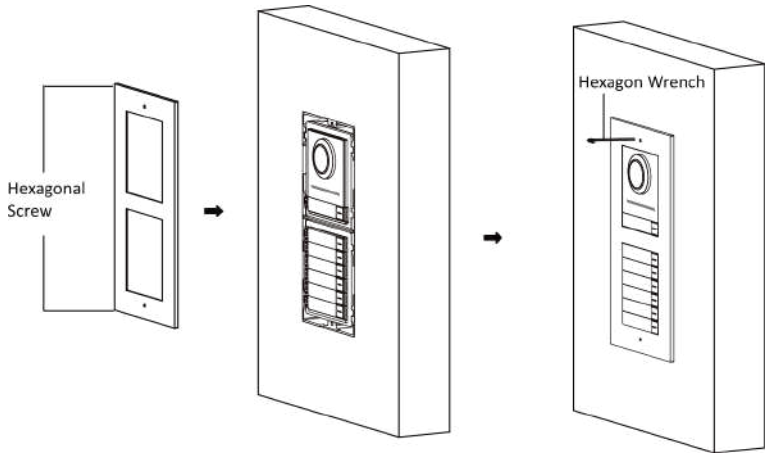

Figure 4-27 Fix the Cover

4.3 Three-Module Installation

4.3.1 Three-Module Surface Installation

Before You Start

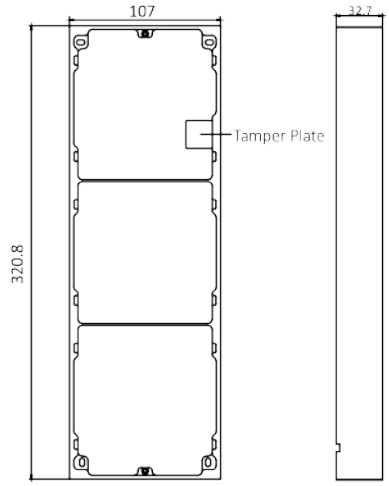

Figure 4-28 Mounting Frame

Note

- The dimension of two-module mounting frame (W × H × D) is: 320.8 mm × 107 mm × 32.7 mm.
- The dimensions above are for reference only. The actual size can be slightly different from the theoretical dimension.

Steps

1. Paste the installation sticker 1 onto the wall. Make sure the sticker is placed horizontally via measuring with the gradienter.
2. Drill 4 holes according to the screw holes on the sticker.The suggested size of hole is 6 (diameter) × 25 (depth) mm. The suggested length of cables left outside is 270 mm.

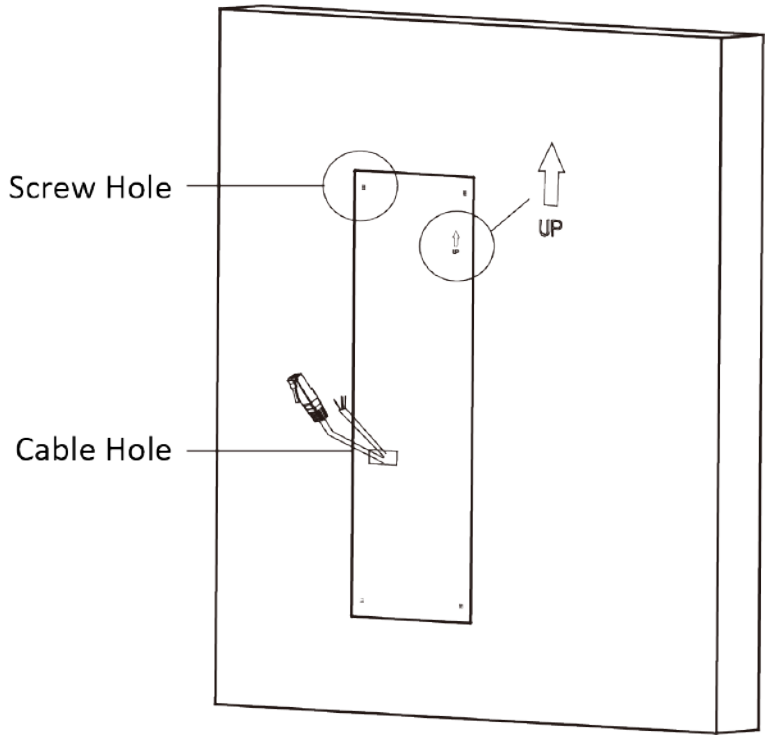

Figure 4-29 Drill Screw Holes

3. Remove the sticker and insert the expansion sleeves into the screw holes.

4. Fix the mounting frame onto the wall with 4 expansion bolts.

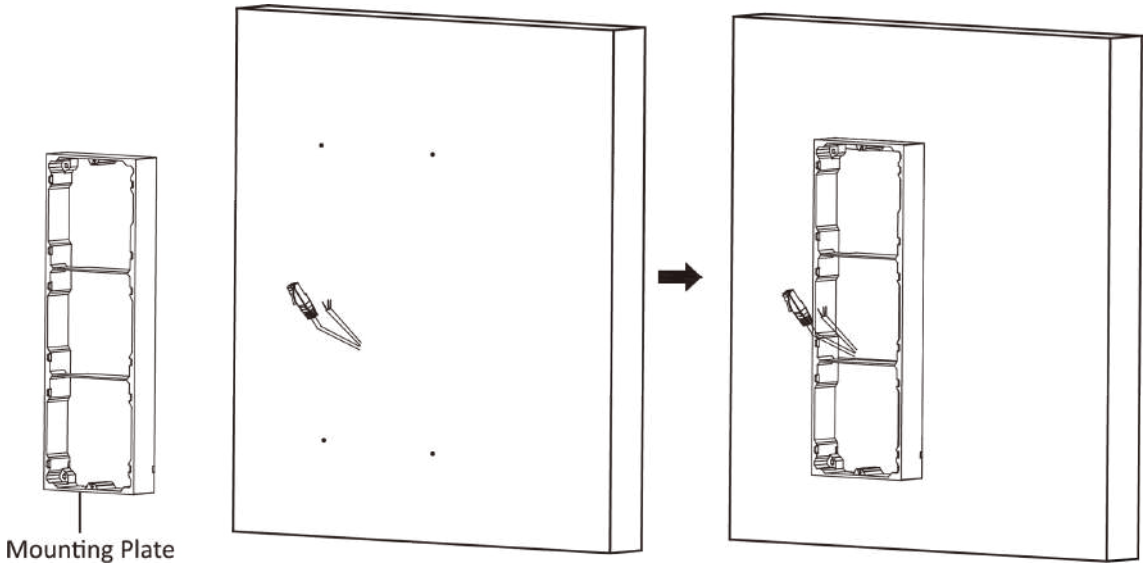

Figure 4-30 Fix the Mounting Frame

Note

The mounting frame should be placed exactly as shown below for this step. The tamper plate should be at the low right of the first grid.

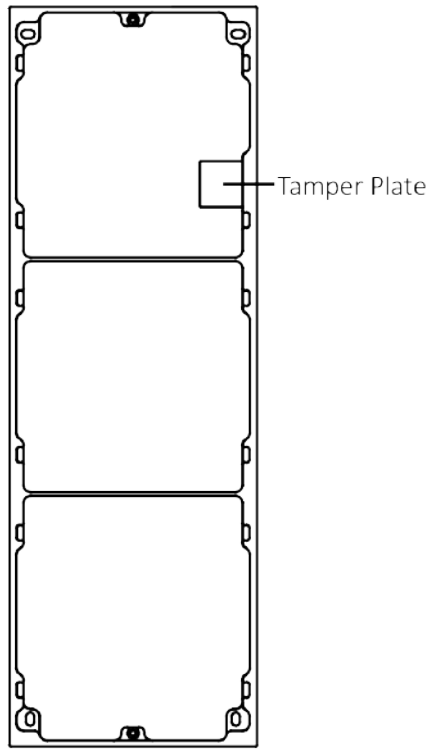

Figure 4-31 Mounting Frame

5. Thread the module-connecting line across the thread holes of the frame. Pass the main unit connecting line across the thread hole to the top grid.

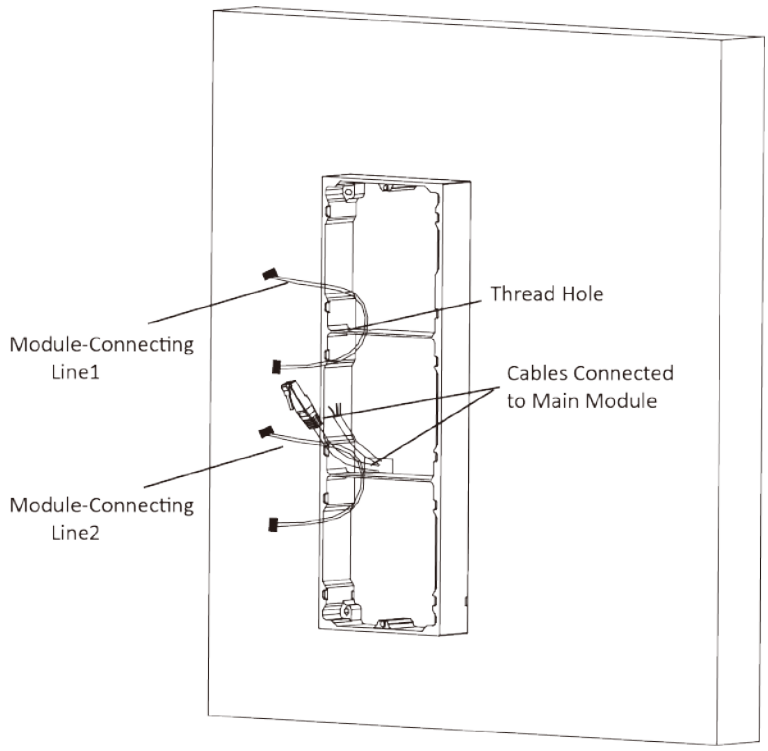

Figure 4-32 Placement of Lines

6. Connect the cables.

1) Connect the lines and module-connecting line 1 to the corresponding interfaces of the main unit, then place the main unit into the upper grid.
2) Connect the other end of the module-connecting line 1 to the input interface of the sub module. Connect two sub modules via module-connecting line 2.
3) Organize the cables with cable tie in the package. The suggested cable connection picture as shown below.

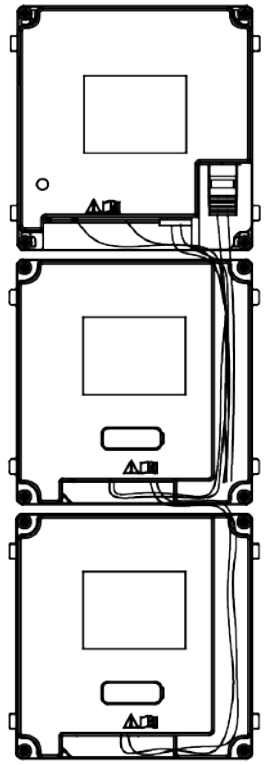

Figure 4-33 Line Connection Effect Picture

7. Insert the modules into the frame after wiring. The main unit must be placed in the top grid.

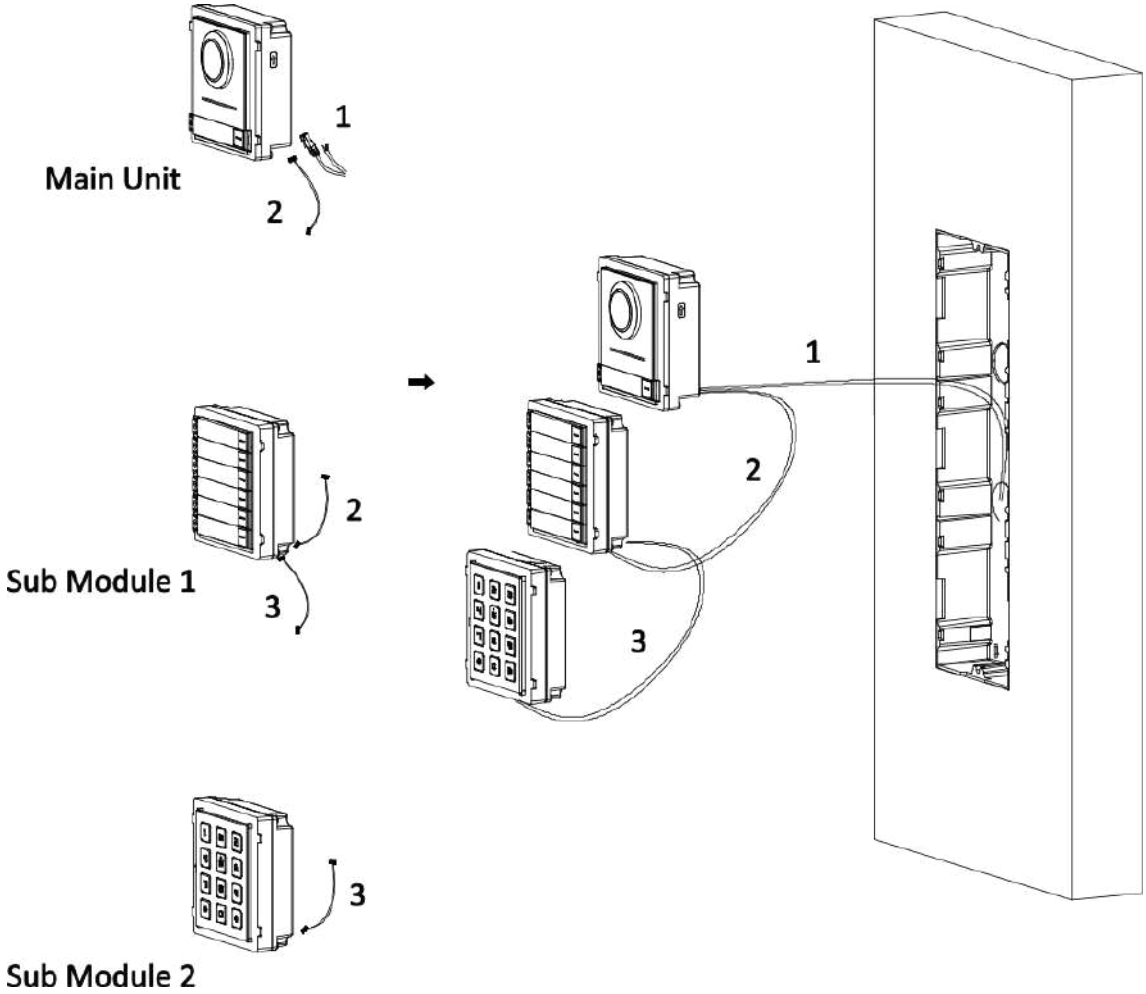

Figure 4-34 Insert the Modules into the Frame

8. Use the hexagon wrench in the package to fix the cover onto the frame.

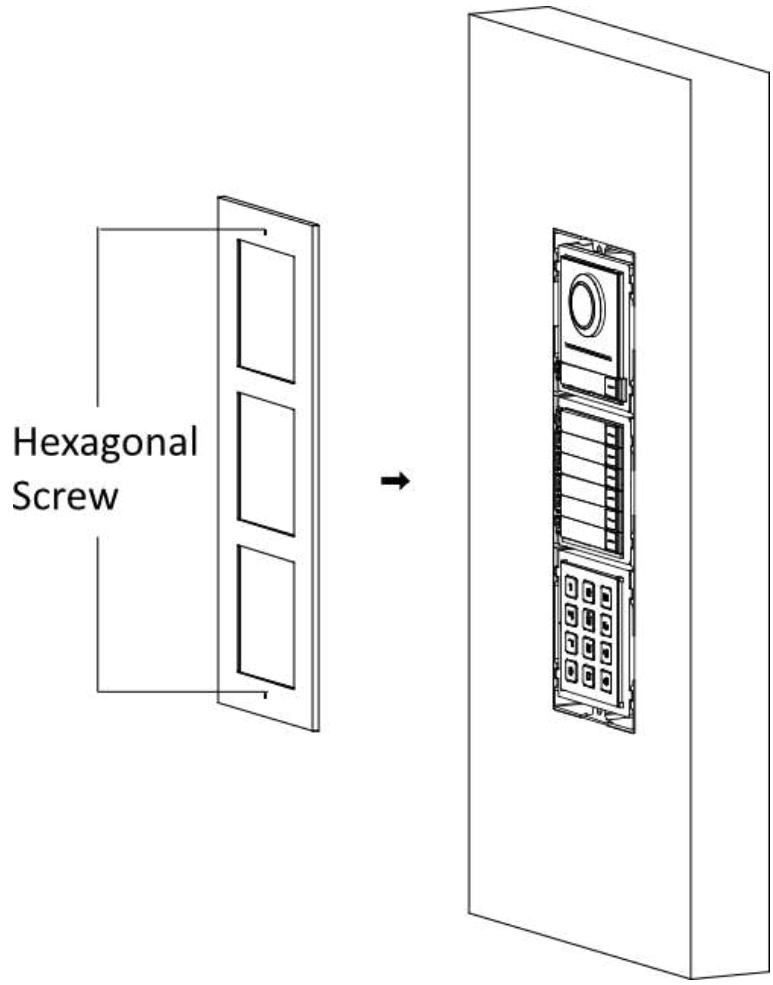

Figure 4-35 Fix the Cover

4.3.2 Three-Module Flush Mounting

Before You Start

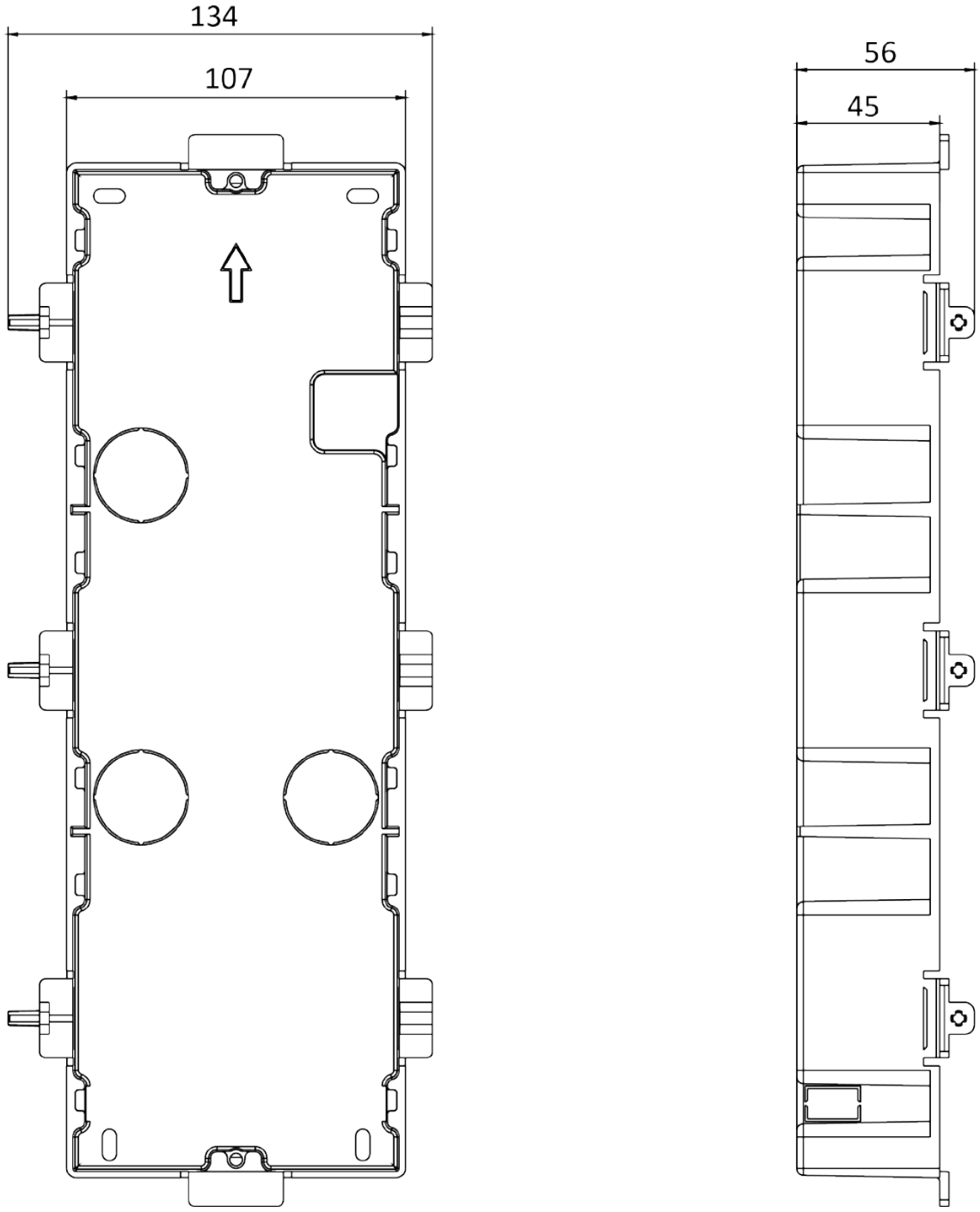

Figure 4-36 Gang Box

Note

- The dimension of one-module gang box is: 338.8(W)×134(H)×56(D) mm.
- The dimensions above are for reference only. The actual size can be slightly different from the theoretical dimension.

Steps

1. Cave the installation hole, and pull the cable out.The suggested dimension of installation hole is 321.8(W)×108(H)×45.5(D) mm. The suggested length of cables left outside is 270 mm.

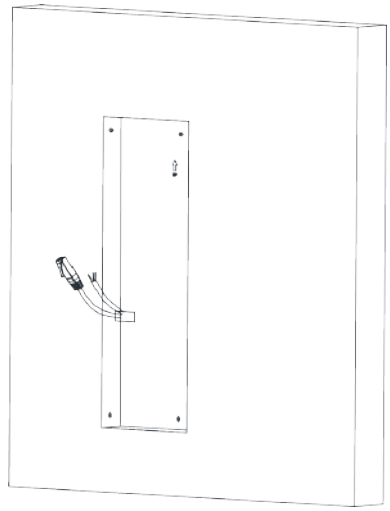

Figure 4-37 Cave the Installation Hole

2. Select a cable entry and remove the plastic sheet.
3. Mark the gang box screw holes on the wall.
   1) Route the cables through the gang box hole.
   2) Insert the gang box into the installation hole.
   3) Mark the gang box screw holes' position with a marker, and take out the gang box.

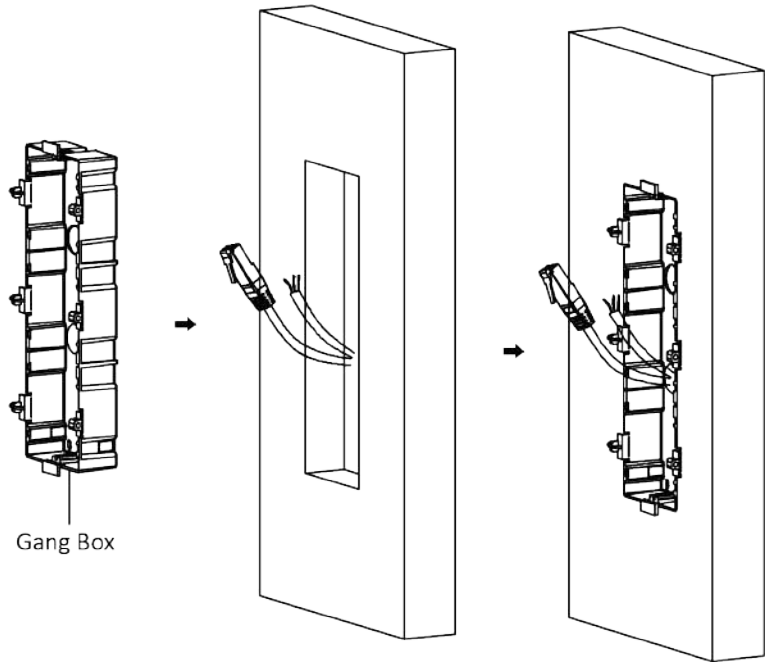

Figure 4-38 Mark the Screw Holes

4. Drill 4 holes according to marks on the wall, and insert the expansion sleeves into the screw holes. The suggested size of hole is 6 (diameter) × 45 (depth) mm.
5. Fix the gang box with 4 expansion bolts.

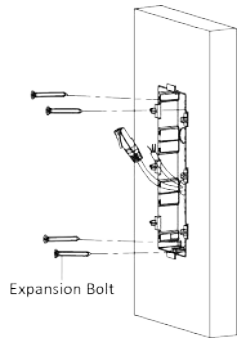

Figure 4-39 Fix the Gang Box

6. Fill the gap between the gang box and wall with concrete. Remove the mounting ears with tool after concrete is dry.

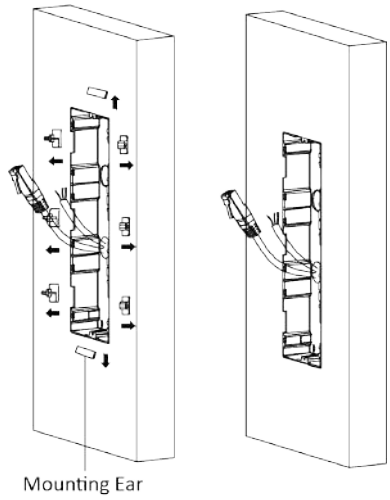

Figure 4-40 Remove the Mounting Ears

7. Connect cables and insert the modules.

1) Connect Cable 1 and one end of Cable 2 to the corresponding interfaces of the main unit, then insert the main unit into the upper grid.
2) Connect the other end of Cable 2 to the input interface of Sub Module 1. Connect one end of Cable 3 to the output interface of Sub Module 1 and insert it into the middle grid.
3) Connect the other end of Cable 3 to the input interface of Sub Module 2. Insert it into the bottom grid.

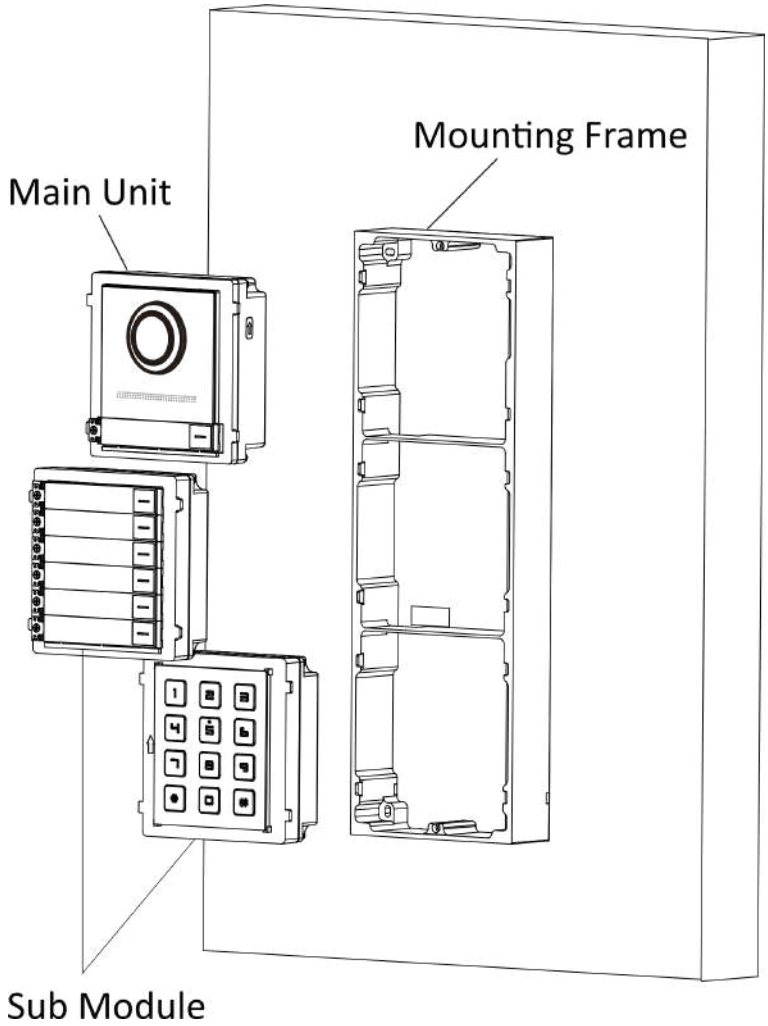

Figure 4-41 Connect Cables and Insert Modules

Note

Cable 1 refers to the cables pulled out from the wall that connected to the main unit. Cable 2 and Cable 3 refer to the module-connecting line in the accessory package.

8. Fix the cover and the main unit with 2 socket head cap screws by using a hexagon wrench (supplied).

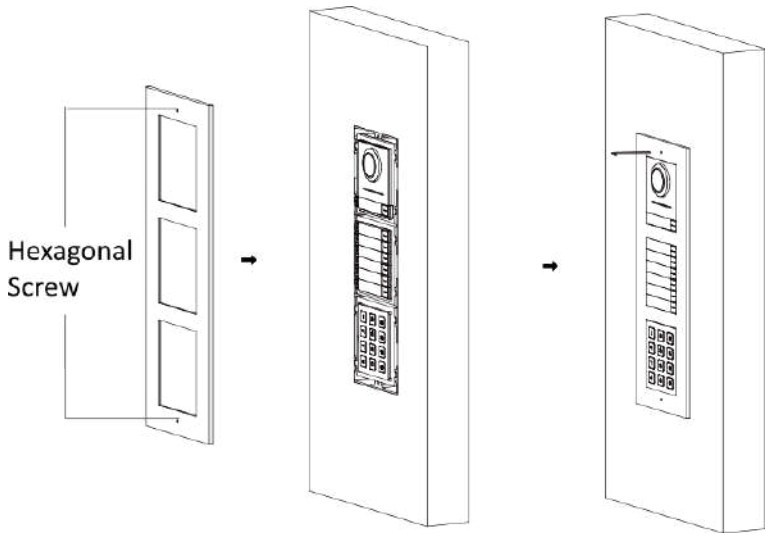

Figure 4-42 Fix the Cover

4.4 More-Than-Three Module Installation

4.4.1 More-than-Three Module Surface Mounting

Before You Start

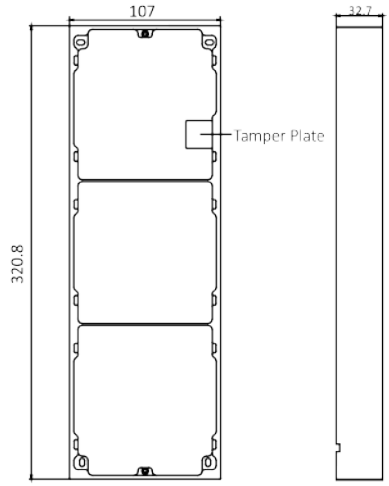

Figure 4-43 Mounting Frame

Note

- It takes two three-module mounting frames. The dimension of three-module mounting frame (W × H × D) is: 320.8 mm × 107 mm × 32.7 mm.
- The dimensions above are for reference only. The actual size can be slightly different from the theoretical dimension.

Steps

1. Paste two Sticker 1 onto the wall. Make sure the stickers are placed horizontally via measuring with the gradienter.
2. Drill 8 holes according to the screw holes on the sticker.

   Note

   - The suggested size of hole is 6 (diameter) × 25 (depth) mm.
   - The suggested length of cables left outside is 270 mm.

3. Pull out the cable through the cable hole of the left sticker.

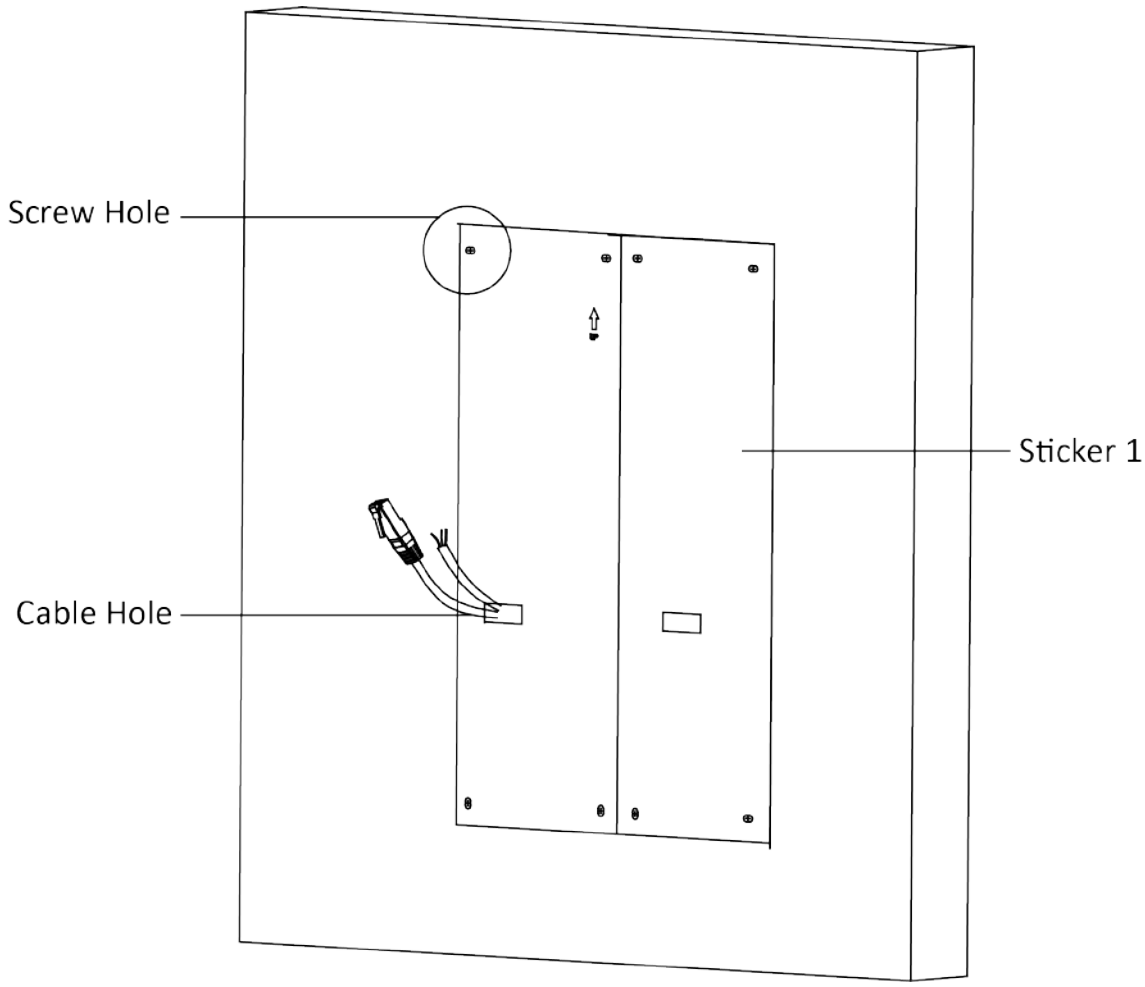

Figure 4-44 Drill Screw Holes

4. Remove the stickers and insert the expansion sleeves into the screw holes.
5. Thread the module-connecting line (400 mm) and grounding line across the thread hole of both frames.

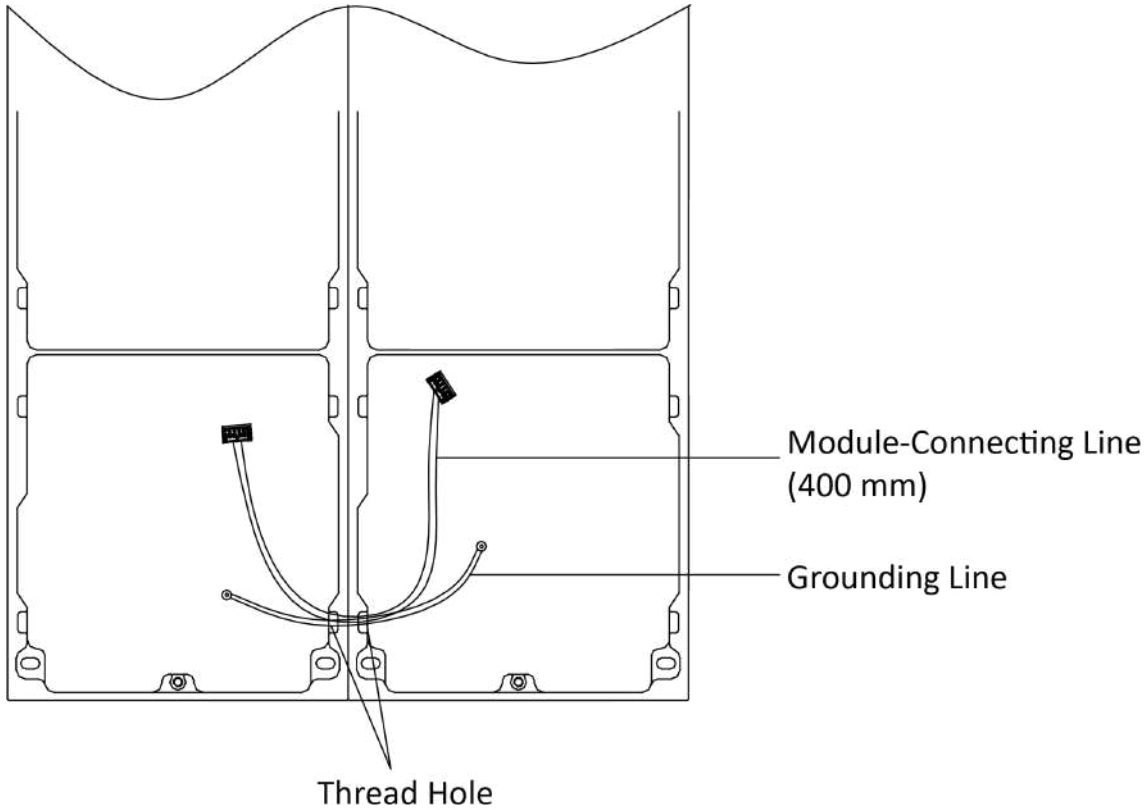

Figure 4-45 Place the Grounding Line and Module-Connecting Line

Note

- There are 6 module-connecting lines in the package: 190 mm × 4 and 400 mm × 2.
- Take the 400 mm module-connecting line for this step.
- The green-yellow line in the package is for grounding.

6. Fix the mounting frame onto the wall with 8 expansion bolts.

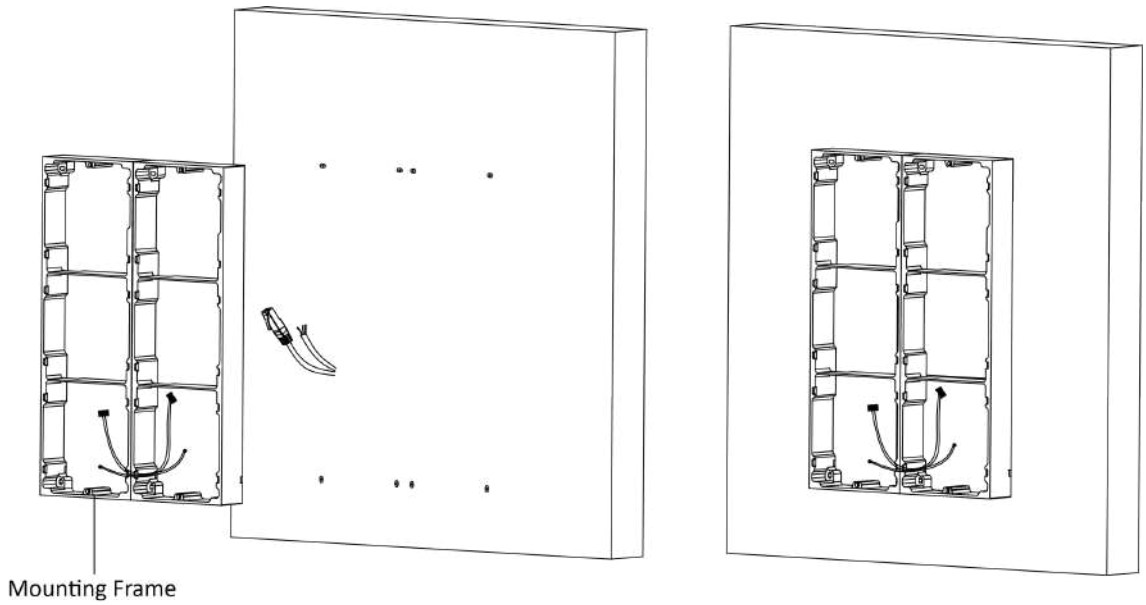

Figure 4-46 Fix the Mounting Frame

7. Pass the main unit connecting line across the thread hole to the top grid of the left frame. Thread the module-connecting line (190 mm) across the thread hole of the frame. The lines should be placed as shown below.

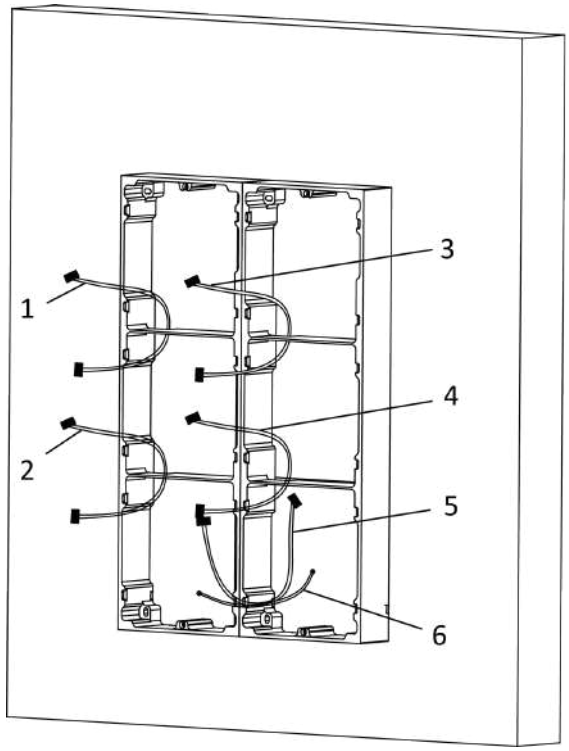

1,2,3,4 : module-connecting line (190 mm)
5 : module-connecting line (400 mm)
6 : module-connecting line (green-yellow)

Figure 4-47 Placement of Lines

8. Connect the cables.

1) Connect the cables from the wall and module-connecting line 1 to the corresponding interfaces of the main unit, then place the main unit into the upper grid.
2) Connect the other end of the module-connecting line 1 to the input interface of the sub module. Connect all sub modules via module-connecting lines.
3) Organize the cable with cable tie in the package. The suggested cable connection picture as shown below.

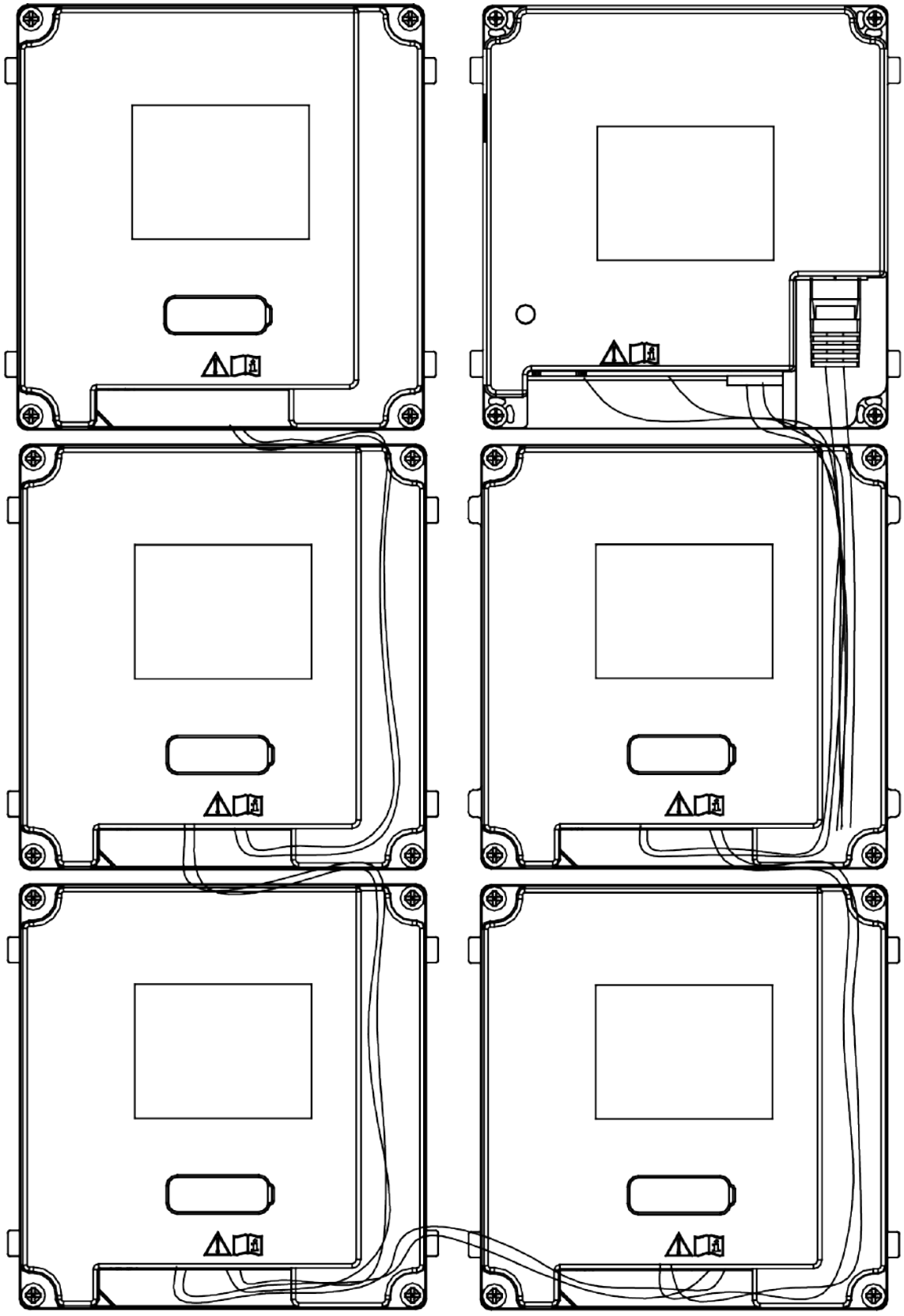

Figure 4-48 Line Connection Effect Picture

9. Insert the modules into the frame after wiring. The main unit must be placed in the top grid on the left.

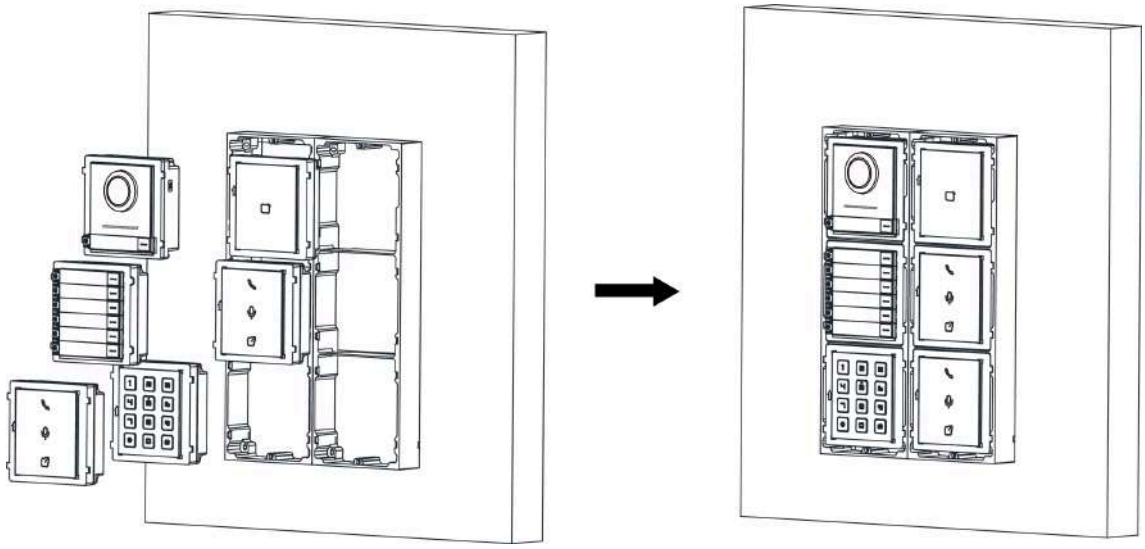

Figure 4-49 Insert the Modules

10. Pull the grounding line out and fixed its two end to the screw on the cover.

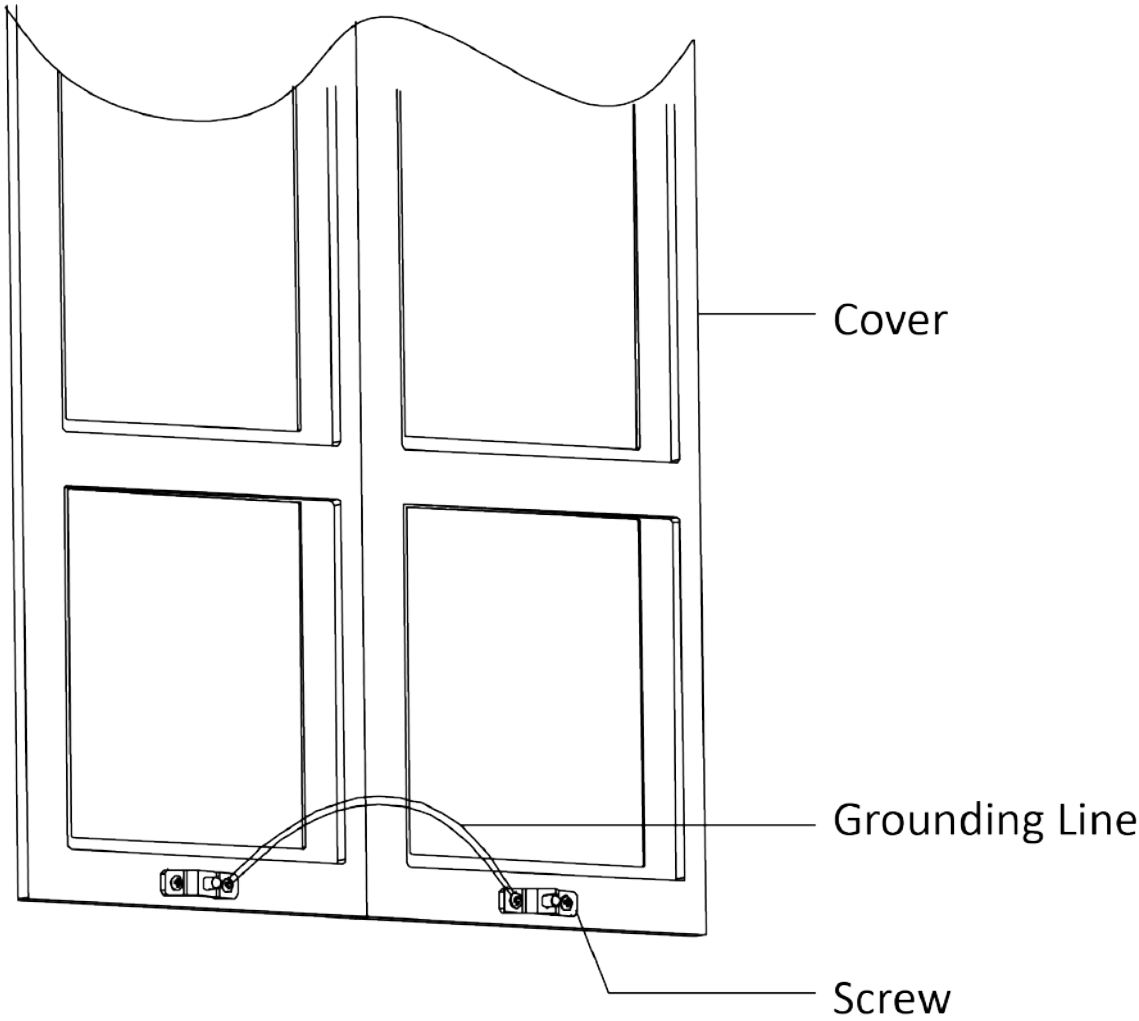

Figure 4-50 Connect the Grounding Line to the Cover

11. Use the hexagon wrench in the package to fix the cover onto the frame.

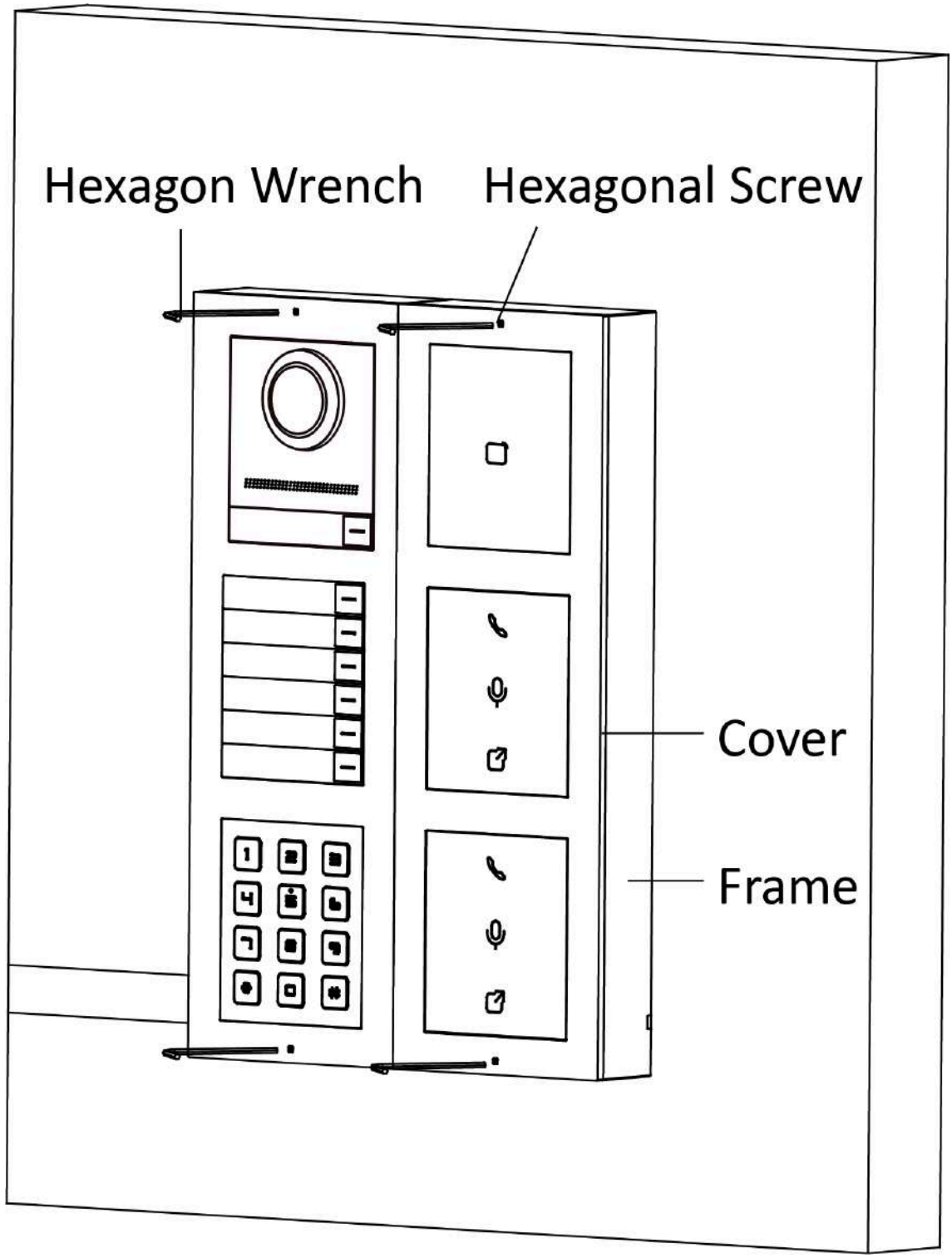

Figure 4-51 Fix the Cover

4.4.2 More-Than-Three Module Flush Mounting

Before You Start

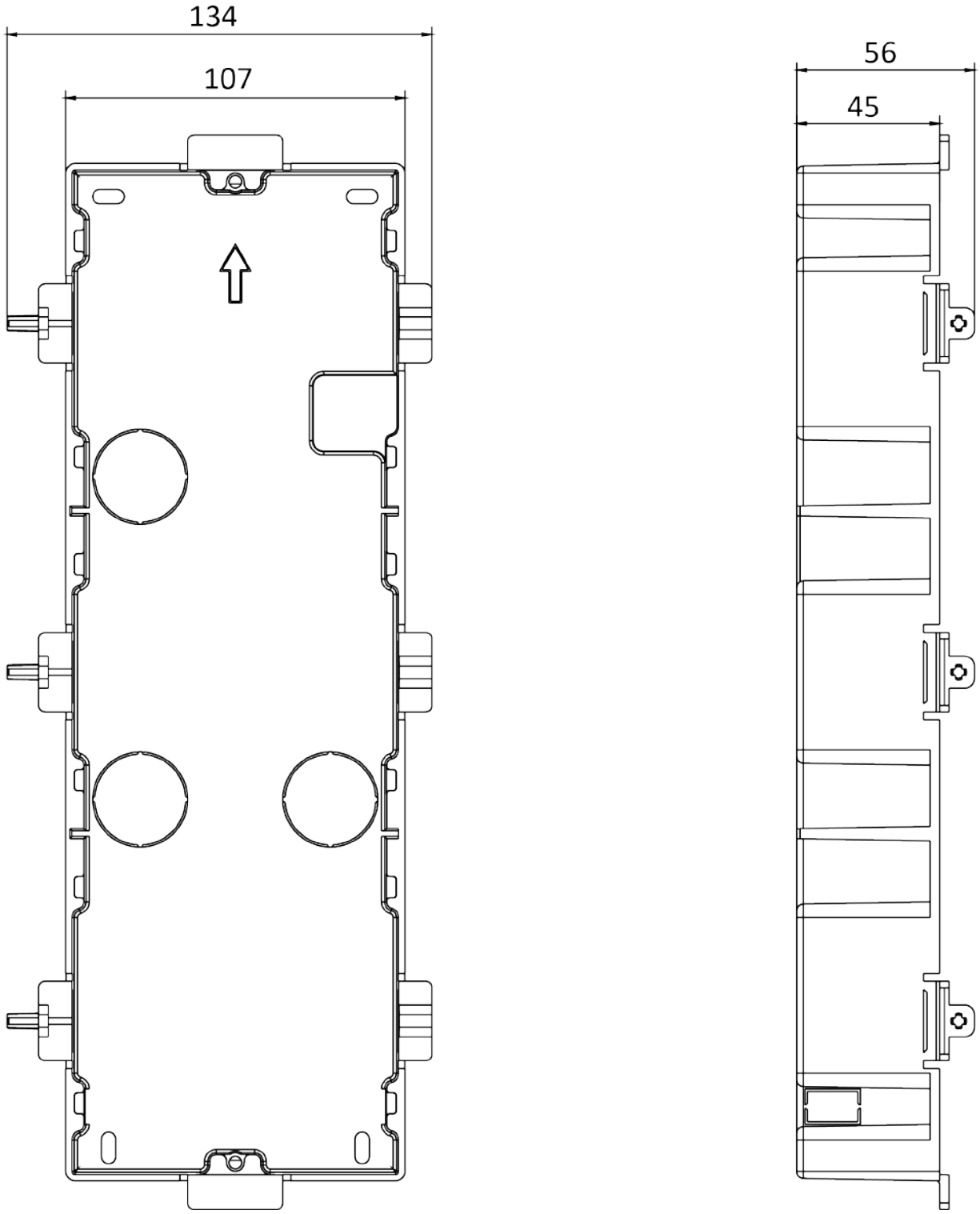

Figure 4-52 Gang Box

Note

It takes two three-module gang boxes. The dimension of the gang box is: 338.8 (W) × 134 (H) × 56 (D) mm. The dimension is for reference only.

Steps

1. Drill the installation hole, and pull the cable out.The suggested dimension of installation hole is 321.8 (W) × 315 (H) × 45.5 (D) mm. The suggested length of cables left outside is 270 mm.

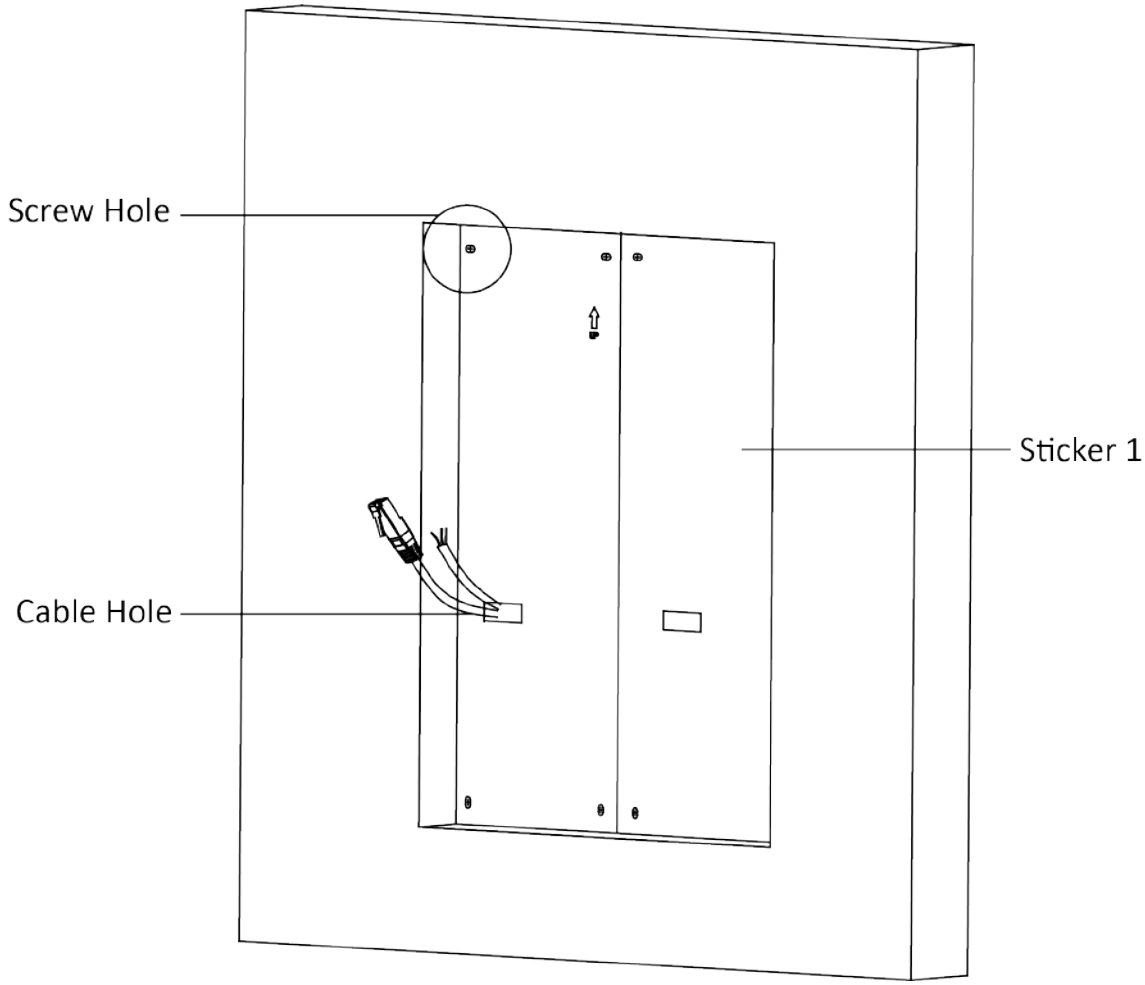

Figure 4-53 Cave the Installation Hole

2. Connect two gang boxes as below.

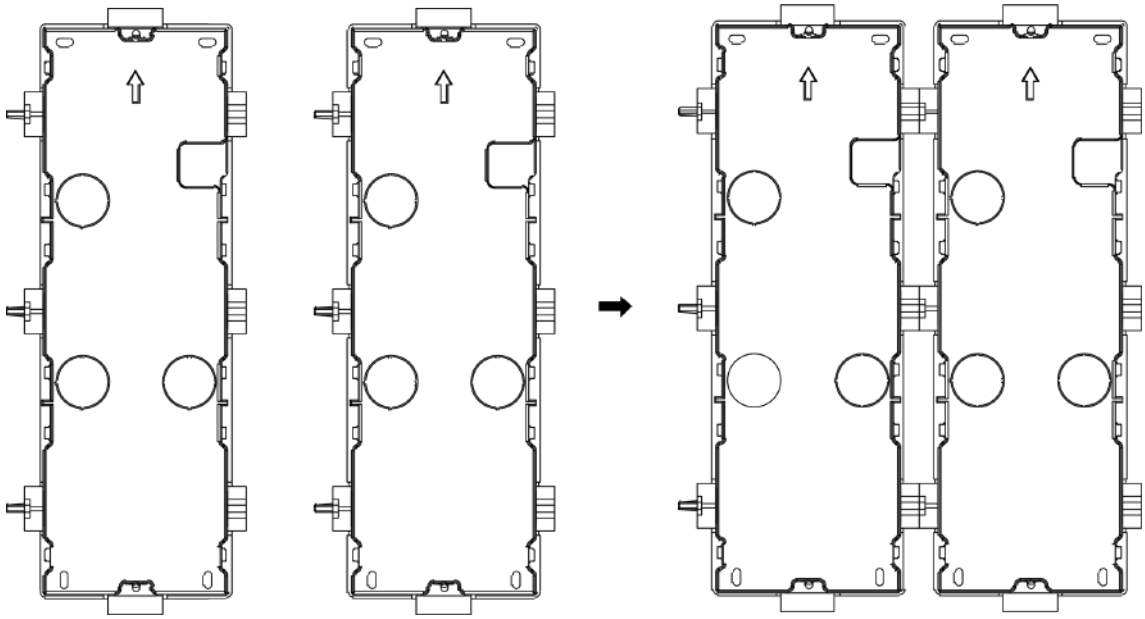

Figure 4-54 Connect Two Gang Boxes

3. Select a cable entry and remove the plastic sheet.

4. Remove the plastic sheets on the side of the gang boxes (shown as 1 and 2) below:

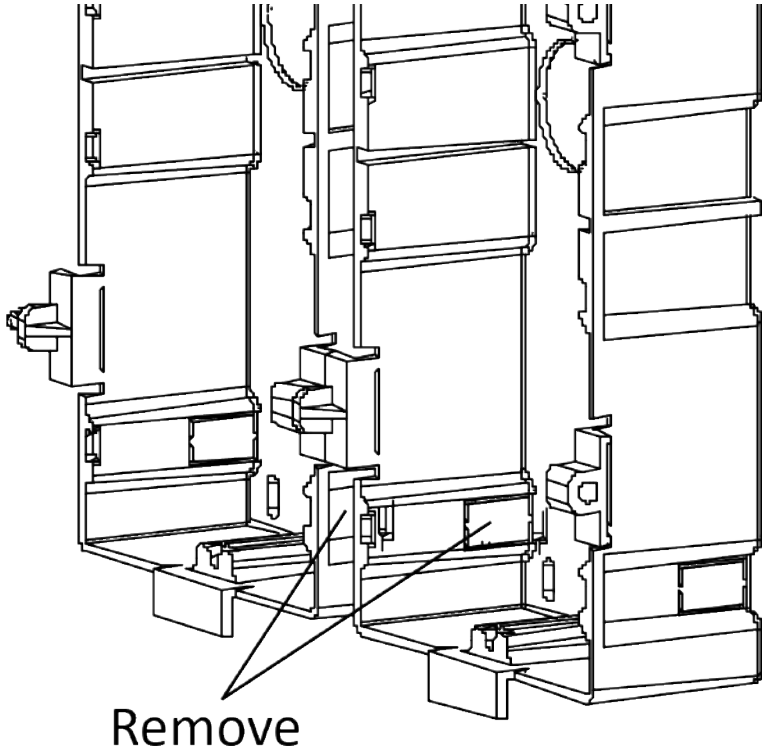

Figure 4-55 Remove the Plastic Sheets

5. Mark the gang box screw holes on the wall.
1) Route the cables through the gang box hole.
2) Insert the gang box into the installation hole.
3) Mark the gang box screw holes' position with a marker, and take out the gang box.

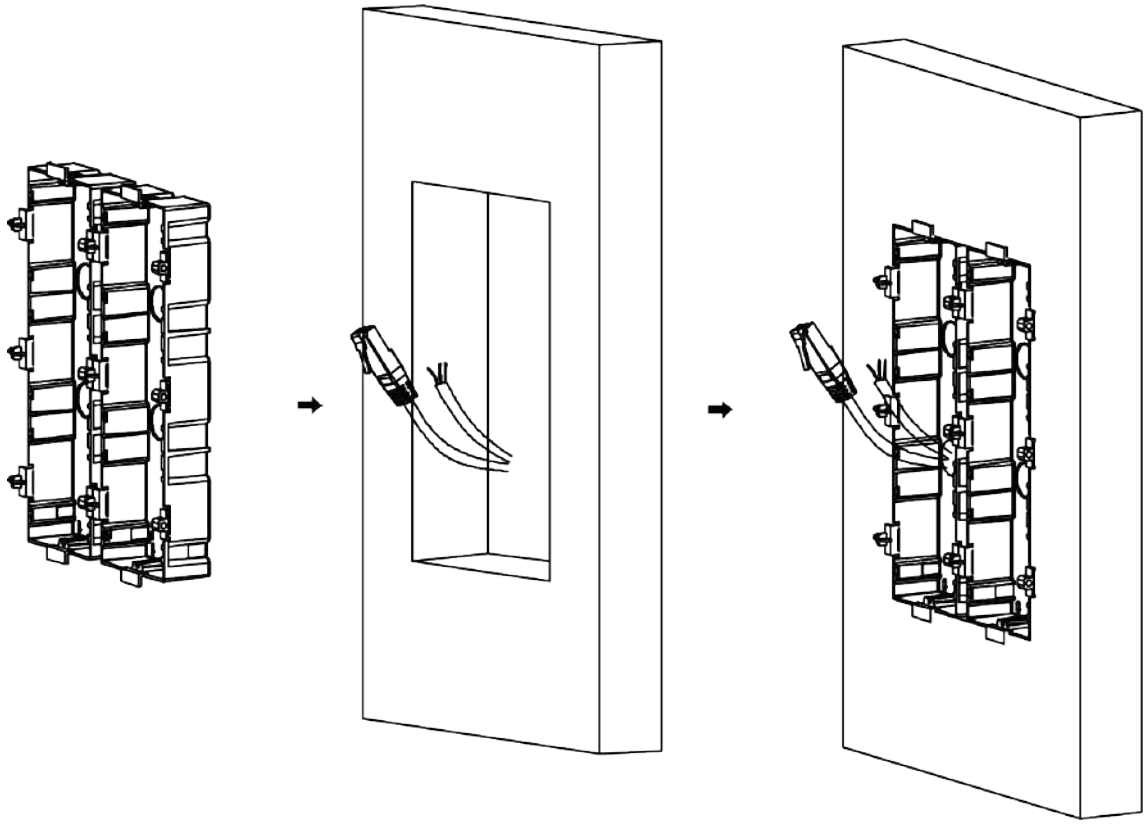

Figure 4-56 Mark the Screw Holes

6. Drill 8 holes according to the marks on the wall, and insert the expansion sleeves into the screw holes. The suggested size of hole is 6 (diameter) × 45 (depth) mm.

7. Fix the gang boxes with 8 expansion bolts.

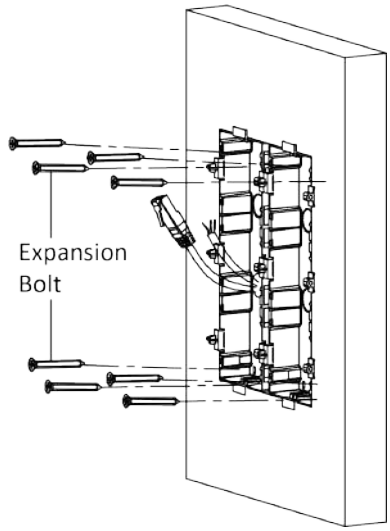

Figure 4-57 Fix the Gang Boxes

8. Fill the gap between the gang box and wall with concrete. Remove the mounting ears with tool after concrete is dry. Route the grounding line through the cable entries.

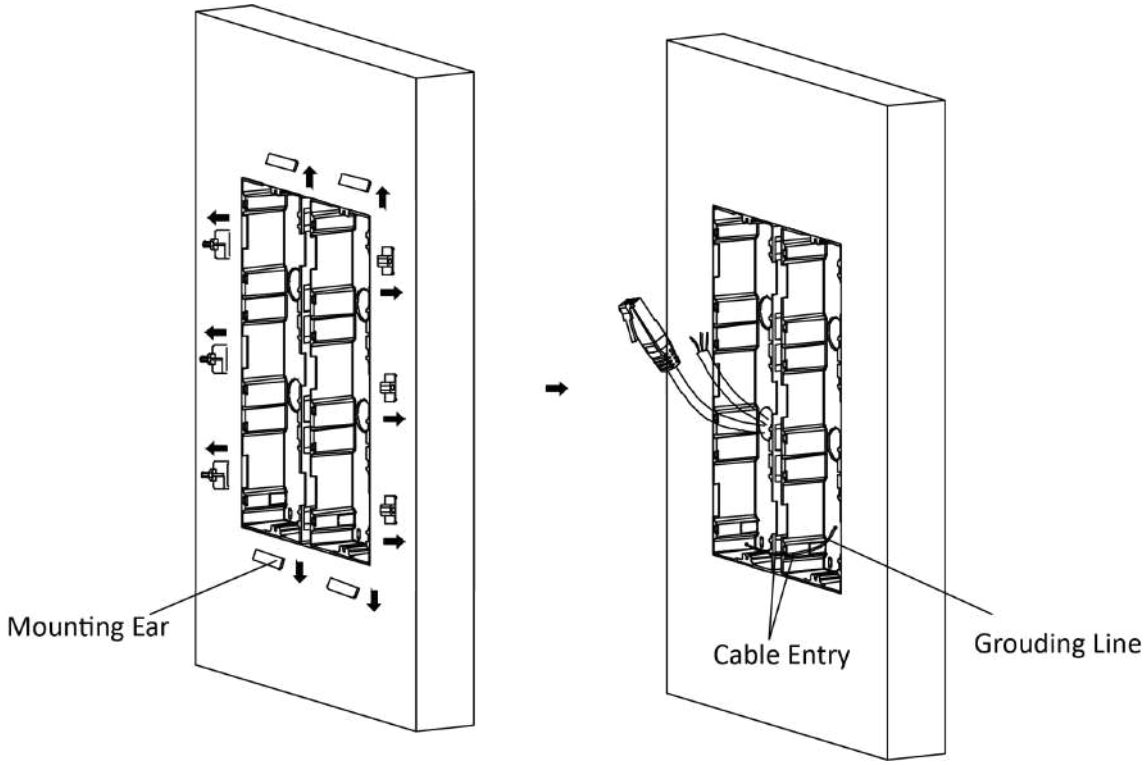

Figure 4-58 Remove the Mounting Ears

Note

The green-yellow line in the package is for grounding.

9. Connect cables and insert the modules.

1) Connect Cable 1 and one end of Cable 2 to the corresponding interfaces of the Main Unit, then place the Main Unit into the upper grid of the left gang box.
2) Connect the other end of Cable 2 to the input interface of Sub Module 1. Connect one end of Cable 3 to the output interface of Sub Module 1 and insert it into the middle grid of the left gang box.
3) Finish the wiring and inserting according to the cable number and the position shown as below.

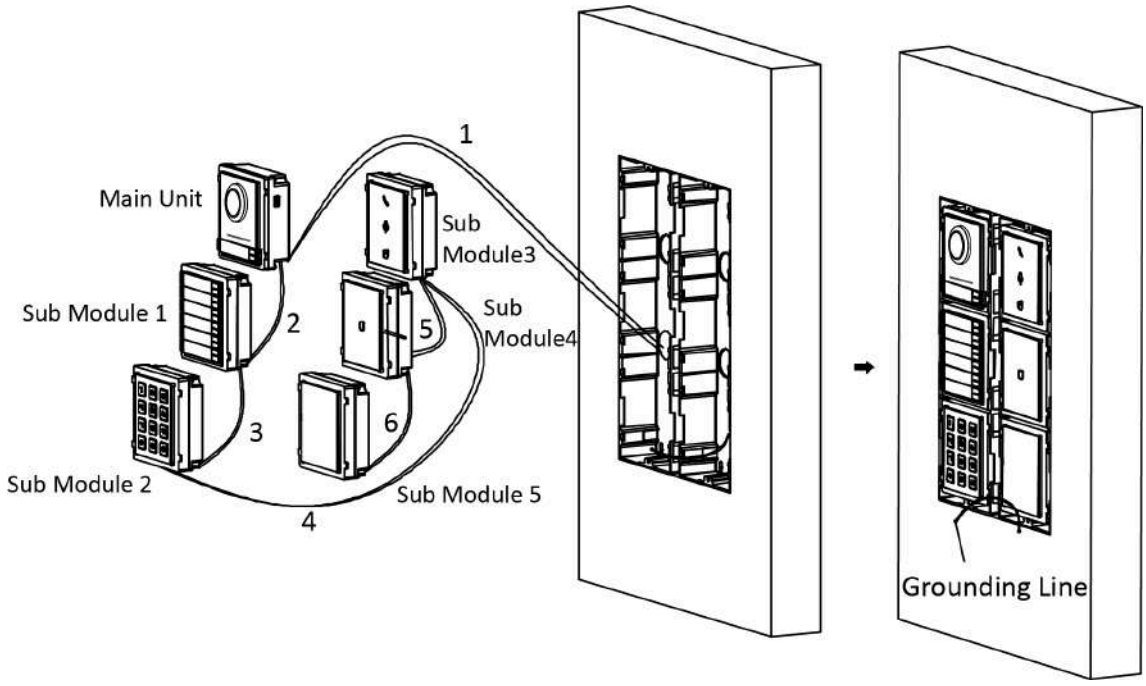

Figure 4-59 Install Mounting Frame

The cables connect to each module shown as below.

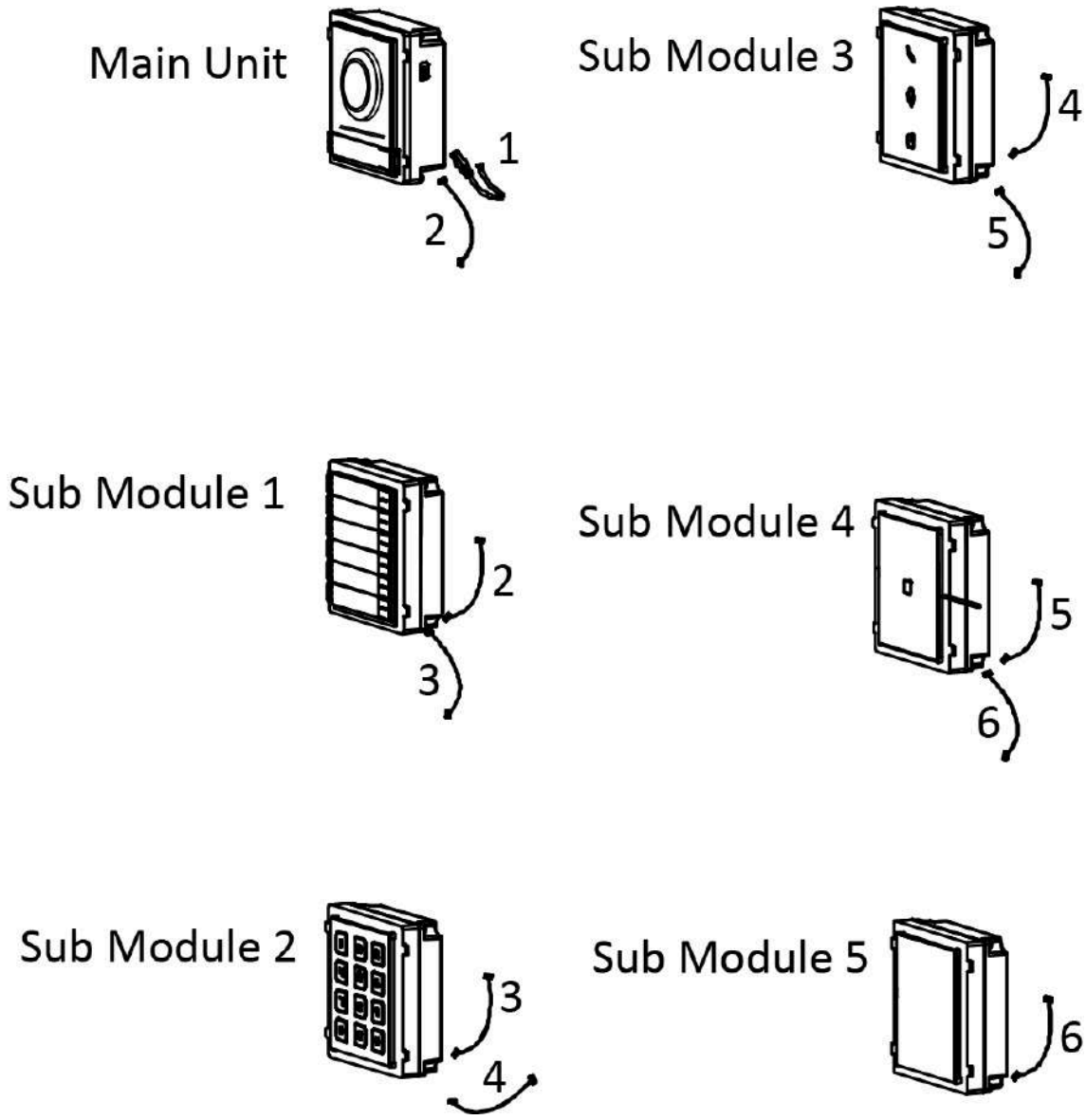

Figure 4-60 Cables Connection

Note

- Cable 2,3,5 and 6 are the module-connecting lines (190 mm) in the package.
- Cable 4 is the module-connecting line (400 mm) in the package.
- Main unit must be put in the top grid.

10. Pull the grounding line out and fixed its two end to the screw on the cover.

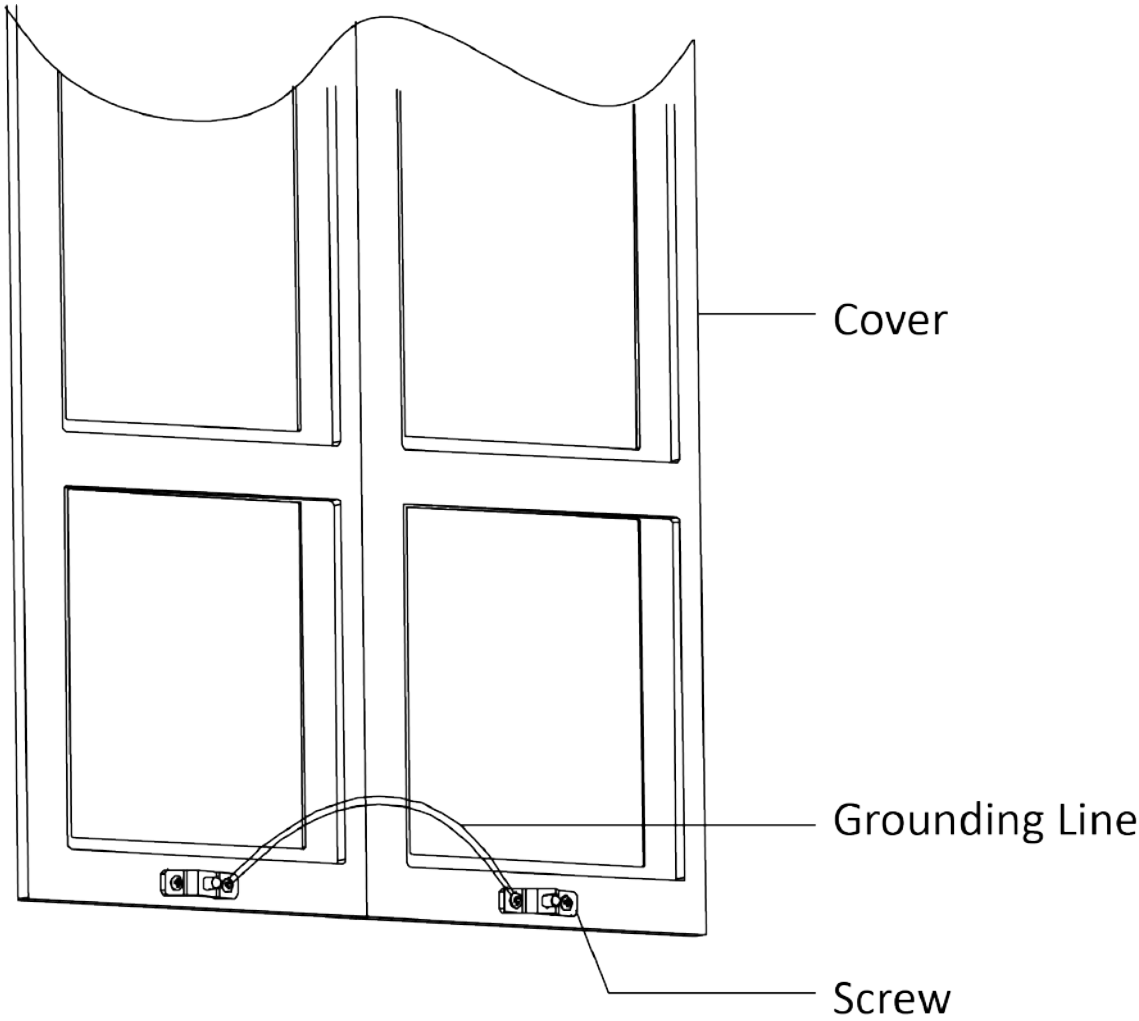

Figure 4-61 Connect the Grounding Line to the Cover

11. Fix the cover with 2 socket head cap screws by using a hexagon wrench (supplied).

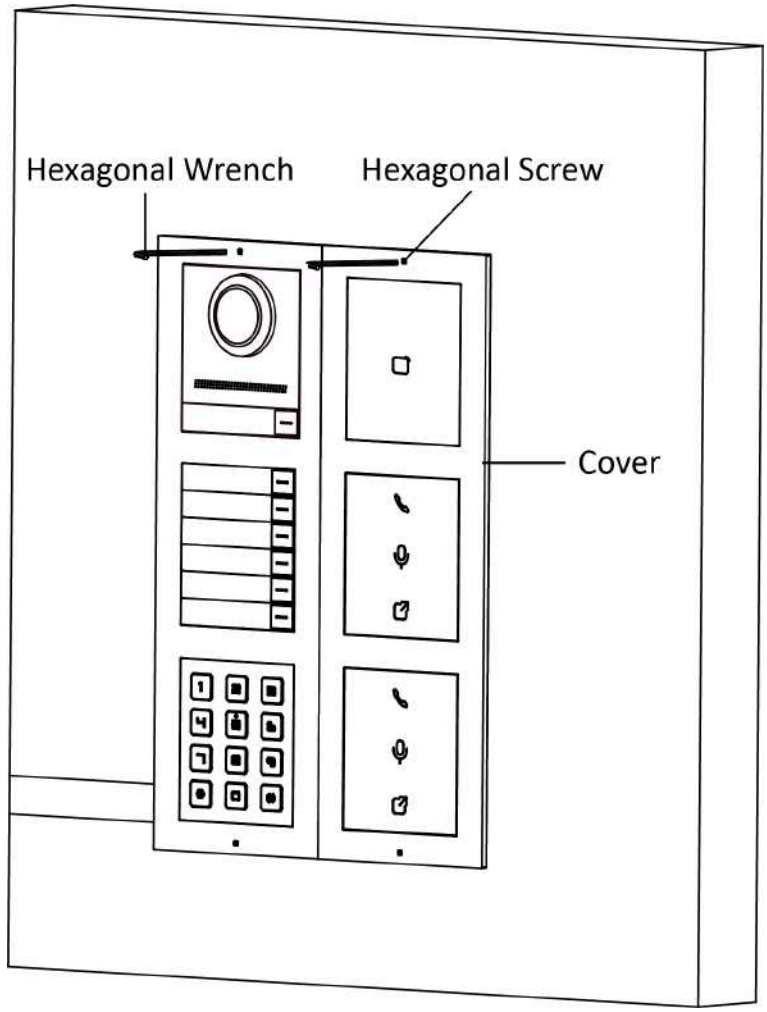

Figure 4-62 Fix the Cover

Chapter 5 Activation

5.1 Activate via Web Browser

You can activate the device via the web browser.

Steps

1. Enter the device default IP address (192.0.0.65) in the address bar of the web browser, and press **Enter**.

   Note

   Make sure the device IP address and the computer's should be in the same IP segment.

2. Create a new password (admin password) and confirm the password.

   Caution

   - The password should be 8 to 16 characters.
   - The password should contain at least 2 of the following types: digits, lowercase letters, uppercase letters and special characters.
   - Do not contain following characters in the password: the user name, 123, admin (case-insensitive), 4 or more continuously increasing or decreasing digits, or 4 or more consecutively repeated characters.
   - The password strength of the device can be automatically checked. In order to increase the security of your product, we highly recommend you change the password of your own choosing. And we recommend you change your password regularly, especially in the high security system, changing the password monthly or weekly can better protect your product. Proper configuration of all passwords and other security settings is the responsibility of the service provider and/or end-user.
   - (If the device supports AP mode, after the admin password is changed, the password of AP hotspot will be changed simultaneously.)

3. Click **Activate**.
4. Edit the device IP address. You can edit the IP address via the SADP tool, the device, and the client software.

Chapter 6 Configuration via Web Client

6.1 Login Web Browser

You can log into the Web browser for device configuration.

Steps

1. Enter the device IP address in the address bar of the web browser and press **Enter** to enter the login page.
2. Enter the device user name and the password. Click **Login** to login to the page.

6.2 Live View

You can view the live video of the device.

After logging in, you will enter the live view page. You can perform the live view, capture, video recording, and other operations.

Figure 6-1 Live View

Function Descriptions:

Select the image size when starting live view.

Set the volume when starting live view.

Note

If you adjust the volume when starting two-way audio, you may hear a repeated sounds.

You can capture image when starting live view.

Reserved function. You can zoom in the live view image.

Start or stop live view.

Start or stop video recording.

Select the streaming type when starting live view. You can select from the main stream and the sub stream.

Full screen view.

6.3 Person Management

Click and add the person's information, including the basic information, authentication mode and credentials. And you can also edit user information, view user picture and search user information in the user list.

Click **User → Add** to enter the page of **Add User**.

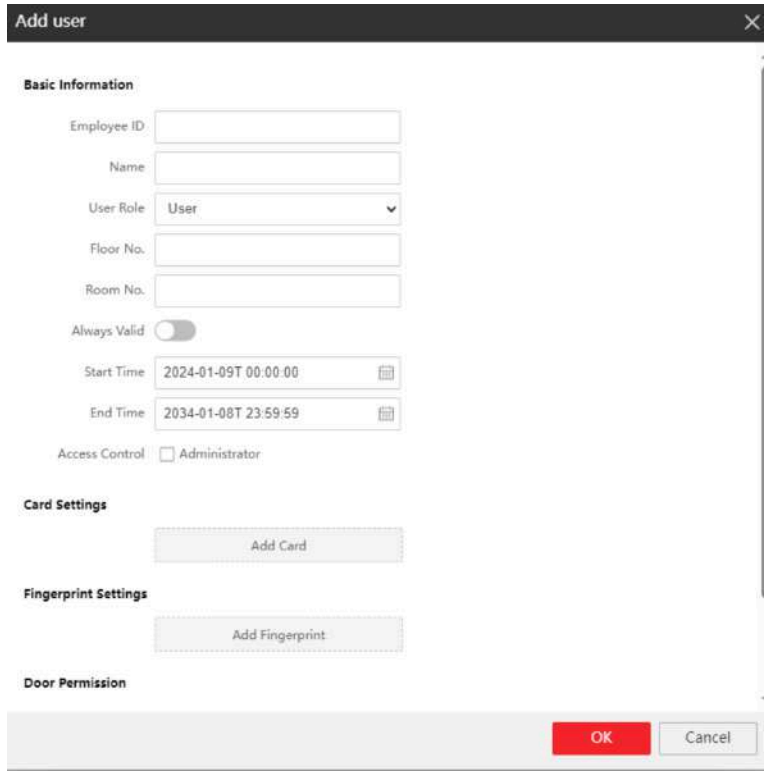

Figure 6-2 Add User

Add Basic Information

Add the person's basic information, including **Employee ID**, **Name**, **Floor No.** and **Room No.** . You also need to select the **User Role**.
Click **OK** to save the settings.

Set Permission Time

Set **Start Time** and **End Time** and the person can only have the permission within the configured time period. If you enable **Always Valid**, then the user can have the permanent permission and you do not need to set **Start Time** and **End Time**.
Click **OK** to save the settings.

Note

You can check **Administrator** to set the user as the Administrator.

Add Card

Click **Add Card**, enter the **Card No.** or click **Read** to read card No. from the card reader module. Select **Property**, and click **OK** to add the card.
Click **OK** to save the settings.

Add Fingerprint

Click **Add Fingerprint**, and press your finger on the fingerprint module to add your fingerprint. Click **Complete** to save the settings.

6.4 Device Management

You can manage the linked device on the page.

Click **Device Management** to enter the settings page.

Figure 6-3 Device Management

Add Device

- Click **Add** to add the indoor station, sub door station or decoder station. Enter the parameters and click **OK** to add.
- Click **Import**. Enter the information of the device in the template to import devices in batch.

Export

Click **Export** to export the information to the PC.

Delete

Select the device and click **Delete** to remove the selected device from the list.

Synchronize

Click **Synchronize** and enable **Synchronize** for device synchronization.

Note

When enabling the function, the activated devices will synchronize parameters. Inactivated devices synchronize parameters whether the function is enabled or not.

Refresh

Click **Refresh** to get the device information.

Optional: Set device information.

- Click to edit device information.
- Click to delete device information from the list.
- Select **Status** and **Device Type** to search devices.

6.5 Remote Configuration

Click ⚙ to set the parameters of the device.

Note

Run the browser, click ⚙ → **Internet Options** → **Security** to disable the Protected Mode.

6.5.1 Local Parameters Settings

You can configure the parameters of the live view, record files and captured pictures. The record files and captured pictures are the ones you record and capture by using the web browser. You can also set and view the saving paths of the captured pictures and recorded videos on the PC that running the web browser.

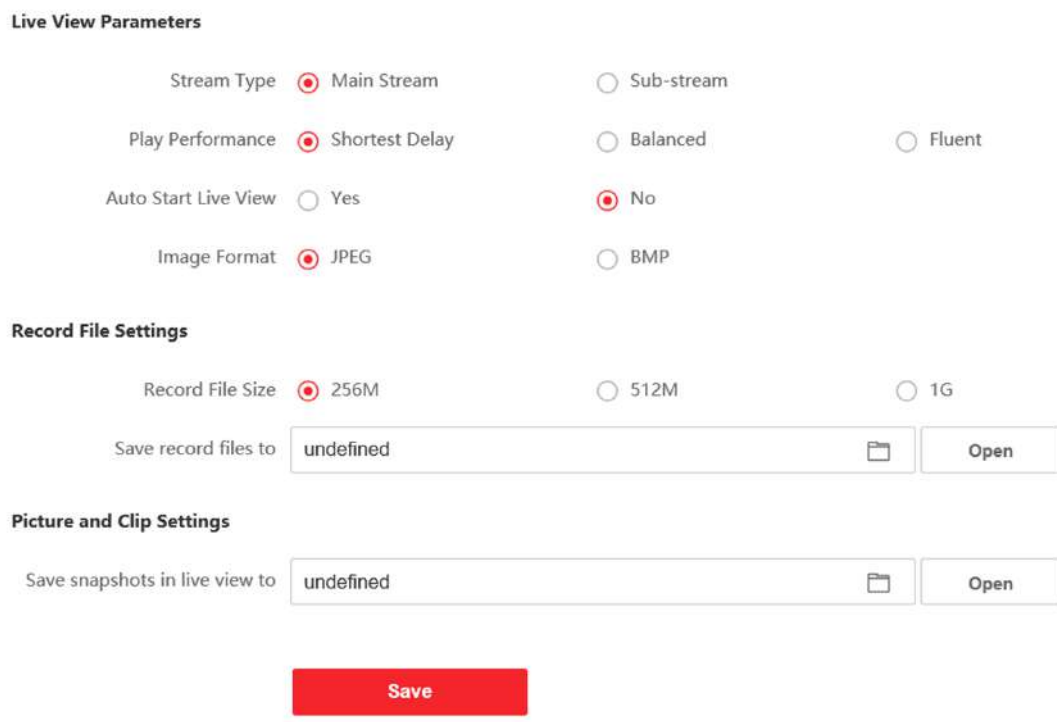

Figure 6-4 Local Parameters

Live View Parameters

Stream Type

Set the stream type as **Main Stream** or **Sub-stream**.

Play Performance

Set the live view performance to **Shortest Delay**, **Balanced** or **Fluent**.

Auto Start Live View

Check **Yes** to enable the function.

Image Format

Select the image format for picture capture.

Click **Save** to enable the settings.

Record File Parameters

Record File Size

Select the packed size of the manually recorded and downloaded video files to **256M**, **512M** or **1G**. After the selection, the maximum record file size is the value you selected.

Save record files to

Set the saving path for the manually recorded video files.

Click **Save** to enable the settings.

Picture and Clip Settings

Save snapshots in live view to

Set the saving path of the manually captured pictures in live view mode.

Note

You can click **Browse** to change the directory for saving the clips and pictures, and click **Open** to open the set folder of clips and picture saving.

Click **Save** to enable the settings.

6.5.2 View Device Information

View the device name, device No., language, model, serial No., version, number of channels, IO input, IO output, lock, alarm input, alarm output, and device capacity, etc.

Click **Configuration → System → System Settings → Basic Information** to enter the configuration page.

You can view the device name, device No., language, model, serial No., version, number of channels, IO input, IO output, lock, alarm input, alarm output, and device capacity, etc.

6.5.3 Set Time

Set the device's time zone, synchronization mode, and the device time.

Click **Configuration → System → System Settings → Time Settings** .

Click **Save** to save the settings after the configuration.

Time Zone

Select the device located time zone from the drop-down list.

Time Sync.

NTP

You should set the alarm receiver type, NTP server's IP address, port No., and interval.

Manual

By default, the device time should be synchronized manually. You can set the device time manually or check **Sync. with Computer Time** to synchronize the device time with the computer's time.

6.5.4 Set DST

Steps

1. Click **Configuration → System → System Settings → Time Settings** .
2. Enable **DST**.
3. Set the DST start time, end time and bias time.
4. Click **Save** to save the settings.

6.5.5 View Open Source Software License

Click **Configuration → System → System Settings → About** .

Click **View Licenses** to view the open source code license.

6.5.6 Upgrade and Maintenance

Reboot device, restore device parameters, and upgrade device version.

Reboot Device

Click **Configuration → System → Maintenance → Upgrade & Maintenance** .
Click **Reboot** to start reboot the device.

Restore Parameters

Click **Configuration → System → Maintenance → Upgrade & Maintenance** .

Default

The device will restore to the default settings, except for the device IP address and the user information.

Restore All

All parameters will be restored to the factory settings. You should activate the device before usage.

Import and Export Parameters

Click **Configuration → System → Maintenance → Upgrade & Maintenance** .

Export

Click **Export** to export the logs or device parameters.

Note

You can import the exported device parameters to another device.

Import

Click and select the file to import. Click **Import** to start import configuration file.

Upgrade

Click **Configuration → System → Maintenance → Upgrade & Maintenance** .
Select an upgrade type from the drop-down list. Click and select the upgrade file from your local PC. Click **Upgrade** to start upgrading.

Note

The upgrading process will be 1 to 10 minutes. Do not power off during the upgrading.

6.5.7 Security Service

Set the security service for logging in the client software.

On the Device for Management page, click **Configuration → System → Security → Security Service** .

Enable SSH

To raise network security, disable SSH service. The configuration is only used to debug the device for the professionals.

6.5.8 Change Administrator's Password

Steps

1. Click **Configuration → System → User Management** .
2. Click .
3. Enter the old password and create a new password.
4. Confirm the new password.
5. Click **Save**.

Caution

- The password should be 8 to 16 characters.
- The password should contain at least 2 of the following types: digits, lowercase letters, uppercase letters and special characters.
- Do not contain following characters in the password: the user name, 123, admin (case-insensitive), 4 or more continuously increasing or decreasing digits, or 4 or more consecutively repeated characters.
- The password strength of the device can be automatically checked. In order to increase the security of your product, we highly recommend you change the password of your own choosing. And we recommend you change your password regularly, especially in the high security system, changing the password monthly or weekly can better protect your product. Proper configuration of all passwords and other security settings is the responsibility of the service provider and/or end-user.
- (If the device supports AP mode, after the admin password is changed, the password of AP hotspot will be changed simultaneously.)

6.5.9 Account Security Settings

You can change the security questions and answers, or the email address for the device. After change the settings, once you forgot the device password, you should answer the new questions or use the new email address to reset the device password.

Steps

1. Click **Configuration → System → User Management → Account Security Settings** .
2. Change the security questions or email address according your actual needs.
3. Enter the device password and click **OK** to confirm changing.

6.5.10 View Device Arming/Disarming Information

View device arming type and arming IP address.

Go to **Configuration → User Management → Arming/Disarming Information** .

You can view the device arming/disarming information. Click **Refresh** to refresh the page.

6.5.11 Network Settings

TCP/IP Settings

TCP/IP settings must be properly configured before you operate the device over network. The device supports IPv4.

Steps

1. Click **Network → Basic Settings → TCP/IP** to enter the settings page.
2. Configure the network parameters.
   - Check **DHCP**, the device will get the parameters automatically.
   - Set the **IPv4 Address**, **IPv4 Subnet Mask** and **IPv4 Default Gateway** manually.
3. Select **Network Card**.
4. Configure the DNS server.
5. Click **Save** to enable the settings.

Port Settings

Steps

1. Click **Network → Basic Settings → Port** to enter the settings page.

Figure 6-5 Port Settings

2. Set the ports of the device.

   HTTP Port

   The default port number is 80, and it can be changed to any port No. which is not occupied.

   RTSP Port

   The default port number is 554.

   HTTPS Port

   The default port number is 443, and it can be changed to any port No. which is not occupied.

   Server Port

   The default server port number is 8000, and it can be changed to any port No. ranges from 2000 to 65535.
3. Click **Save** to enable the settings.

SIP Setting

Steps

1. Click **Network → Basic Settings → SIP** to enter the settings page.

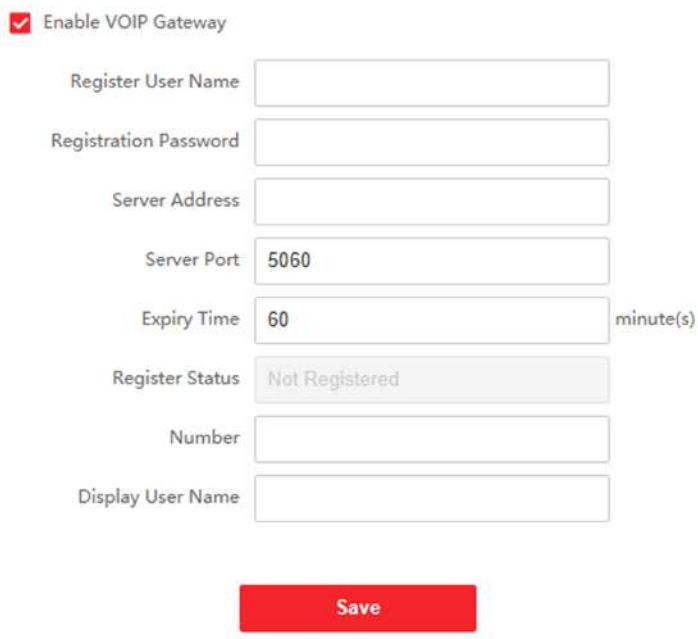

Figure 6-6 SIP Settings

2. Check **Enable VOIP Gateway**.
3. Configure the SIP parameters.
4. Click **Save** to enable the settings.

FTP Settings

Steps

1. Click **Network → Advanced → FTP** to enter the settings page.

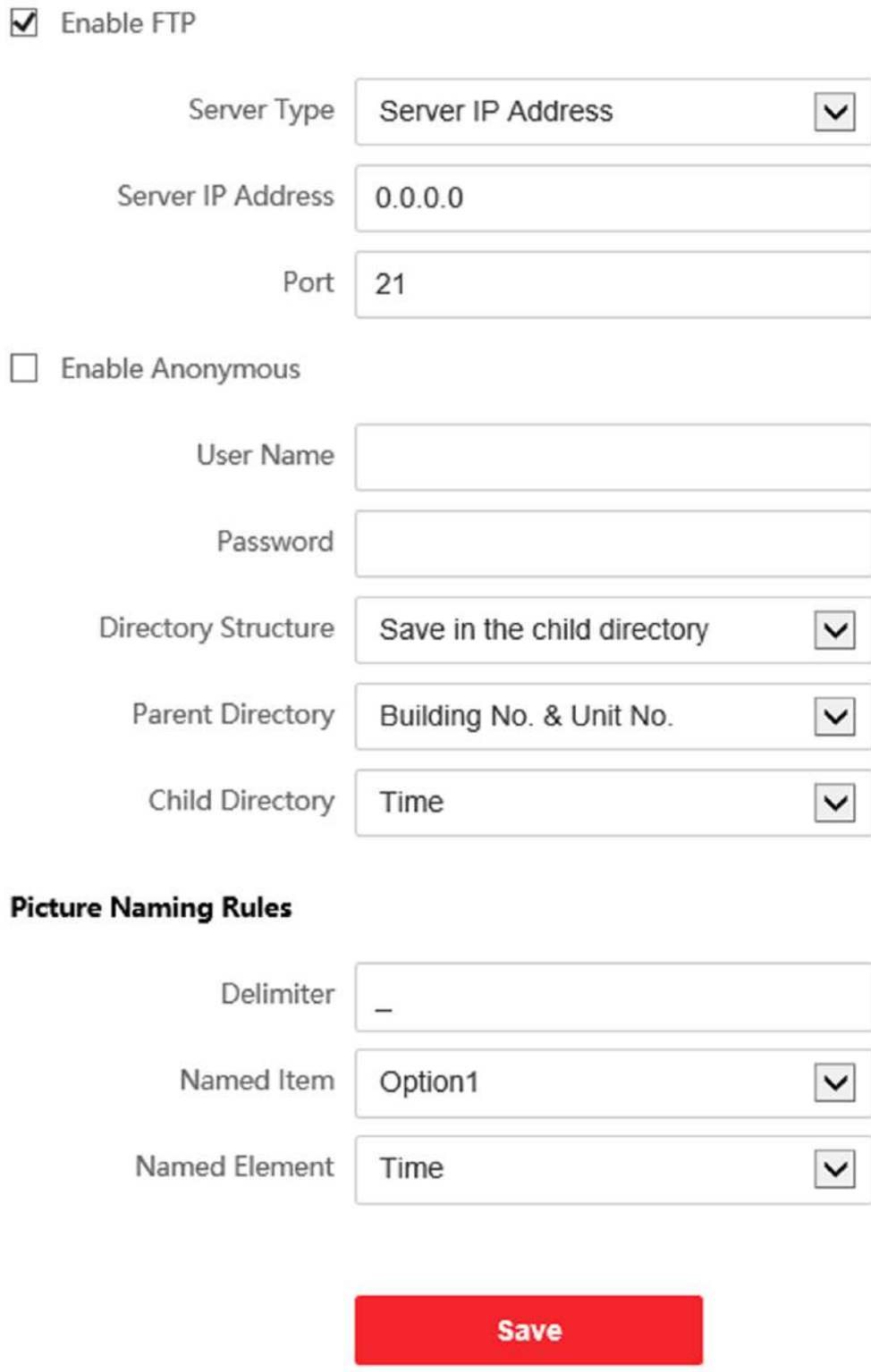

Figure 6-7 FTP Settings

2. Check **Enable FTP**.
3. Select **Server Type**.
4. Input the **Server IP Address** and **Port**.
5. Configure the FTP Settings, and the user name and password are required for the server login.
6. Set the **Directory Structure**, **Parent Directory** and **Child Directory**.
7. Set the picture naming rules.
8. Click **Save** to enable the settings.

6.5.12 Video & Audio Settings

Video Parameters

Steps

1. Click **Video/Audio → Video** to enter the settings page.

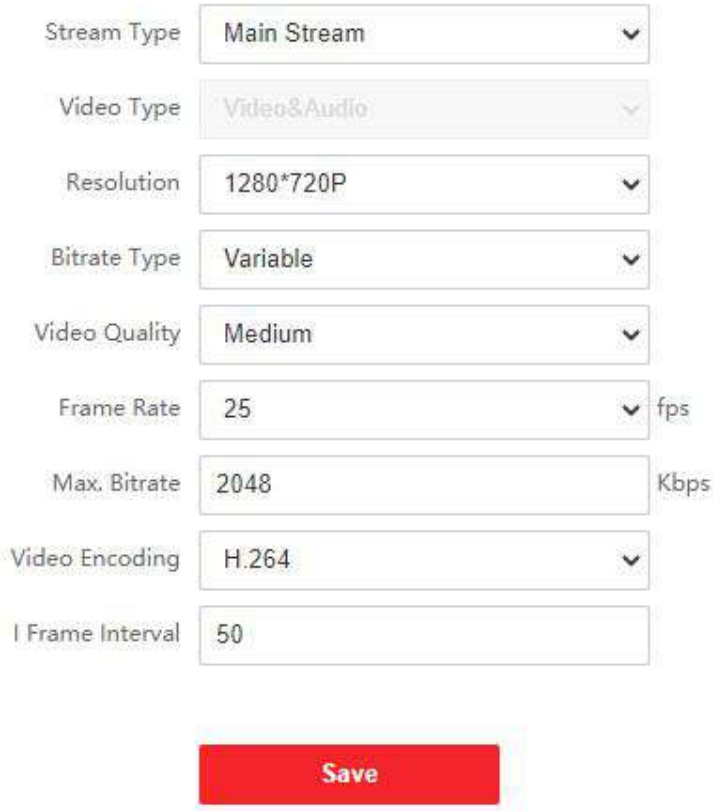

Figure 6-8 Video Parameters

2. Select the **Stream Type**.
3. Configure the video parameters.

Stream Type

Select the stream type to main stream or sub stream.

Video Type

Select the stream type to video stream, or video & audio composite stream. The audio signal will be recorded only when the **Video Type** is **Video & Audio**.

The video type is video & audio read only by default.

Resolution

Select the resolution of the video output.

Bitrate Type

Select the bitrate type as constant or variable.

Video Quality

When bitrate type is selected as Variable, 6 levels of video quality are selectable.

Frame Rate

Set the frame rate. The frame rate is to describe the frequency at which the video stream is updated and it is measured by frames per second (fps). A higher frame rate is advantageous when there is movement in the video stream, as it maintains image quality throughout.

Max. Bitrate

Set the max. bitrate from 32 to 16384 Kbps. The higher value corresponds to the higher video quality, but the better bandwidth is required.

Video Encoding

The device supports H.264.

I Frame Interval

Set I Frame Interval from 1 to 400.

4. Click **Save** to save the settings.

Audio Parameters

Steps

1. Click **Video/Audio → Audio** to enter the settings page.

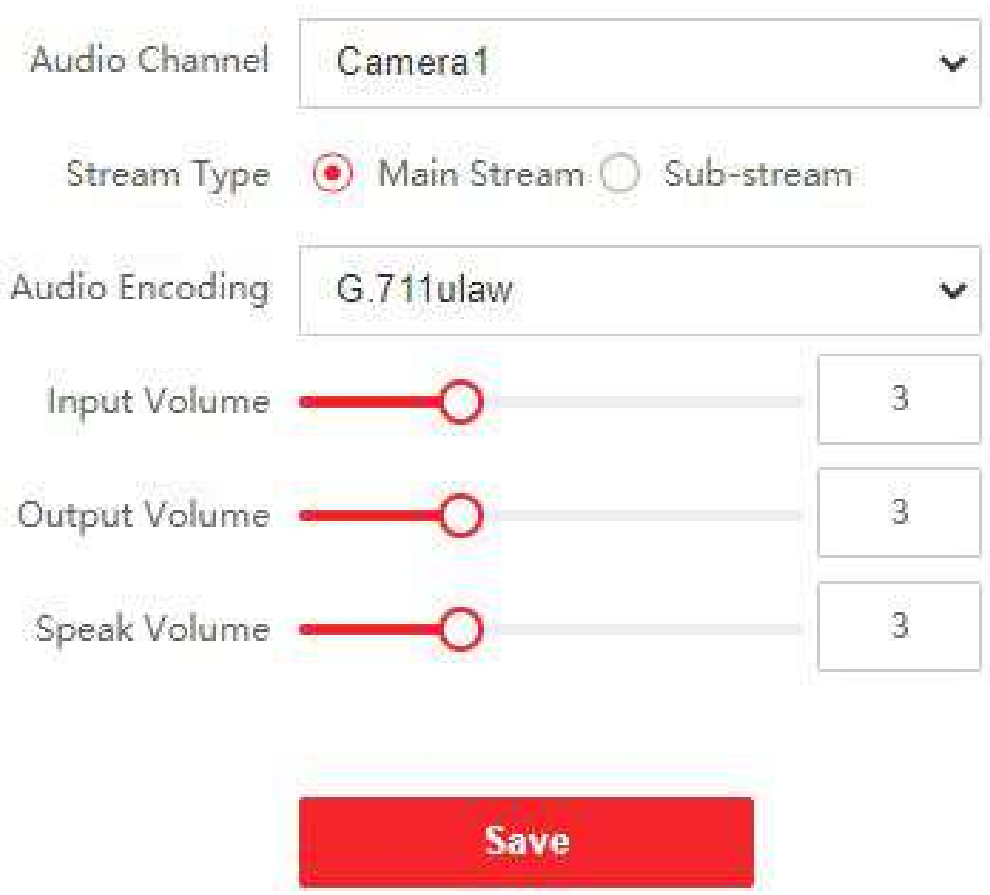

Figure 6-9 Audio Settings

2. Configure the stream type and the audio encoding type.

Audio Channel

Select the audio channel to adjust the audio parameters.

Stream Type

Select the stream type to main stream or sub stream.

Audio Encoding

The device support G.711ulaw and G.711 alaw.

3. Adjust the **Input Volume**, **Output Volume** and **Speak Volume**.

Note

Available range of volume: 0 to 10.

4. Click **Save** to save the settings.

6.5.13 Image Settings

Display Settings

Configure the image adjustment, backlight settings and other parameters in display settings.

Steps

1. Click **Image → Display Settings** to enter the display settings page.

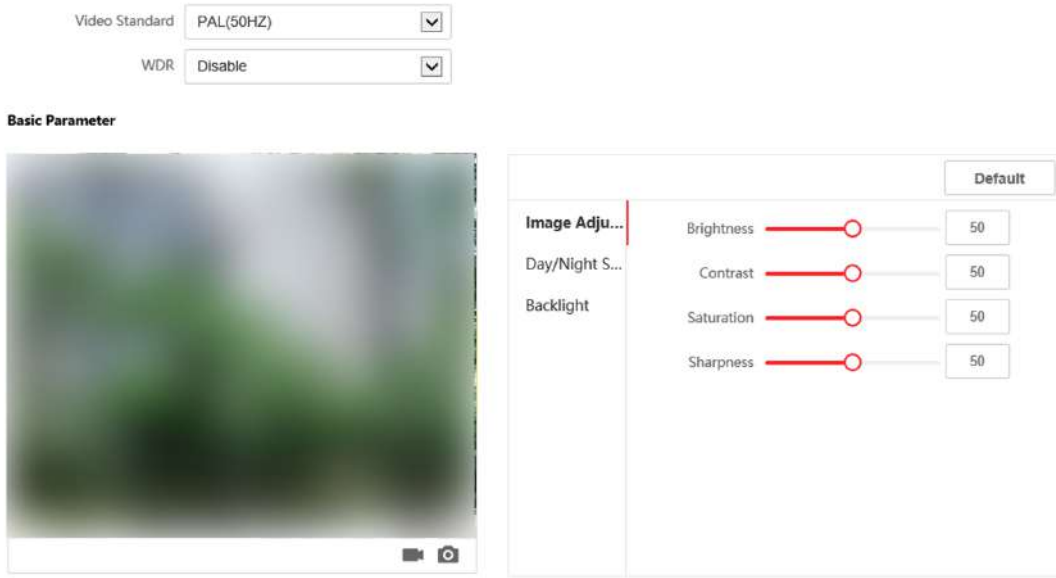

Figure 6-10 Display Settings

2. Select the **Video Standard**.
3. Select to enable or disable **WDR**.

Note

Wide Dynamic Range can be used when there is a high contrast of the bright area and the dark area of the scene.

4. Set the basic parameters.

Brightness

Brightness describes bright of the image, which ranges from 1 to 100.

Contrast

Contrast describes the contrast of the image, which ranges from 1 to 100.

Saturation

Saturation describes the colorfulness of the image color, which ranges from 1 to 100.

Sharpness

Sharpness describes the edge contrast of the image, which ranges from 1 to 100.

5. Set the **Day/Night Switch**.

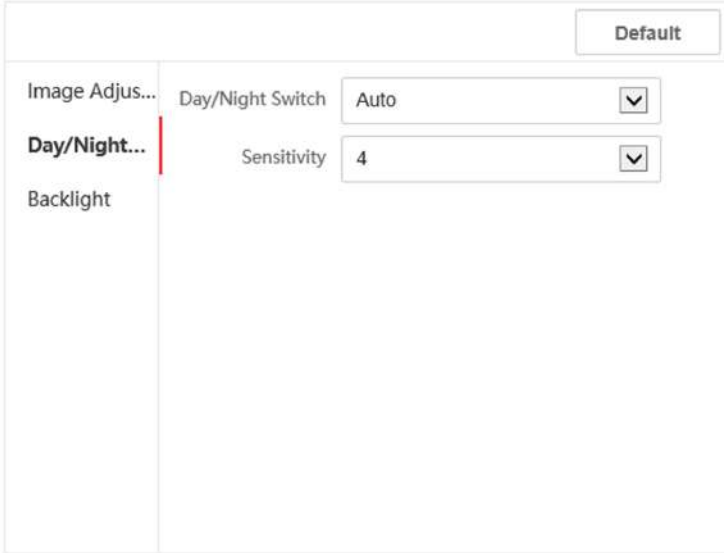

Figure 6-11 Day/Night Switch

- Set **Daytime** or **Night**.
- Set the mode as **Auto** and edit the sensitivity according to your needs.
- Set the mode as **Scheduled-Switch**. Set the start time and end time.

6. Set the backlight parameters.

Figure 6-12 Backlight

1) Check to enable BLC.
2) Select **BLC Area**.

OSD Settings

You can customize the camera name, time/date format on the live view.

Steps

1. Click **Image → OSD** to enter the settings page.

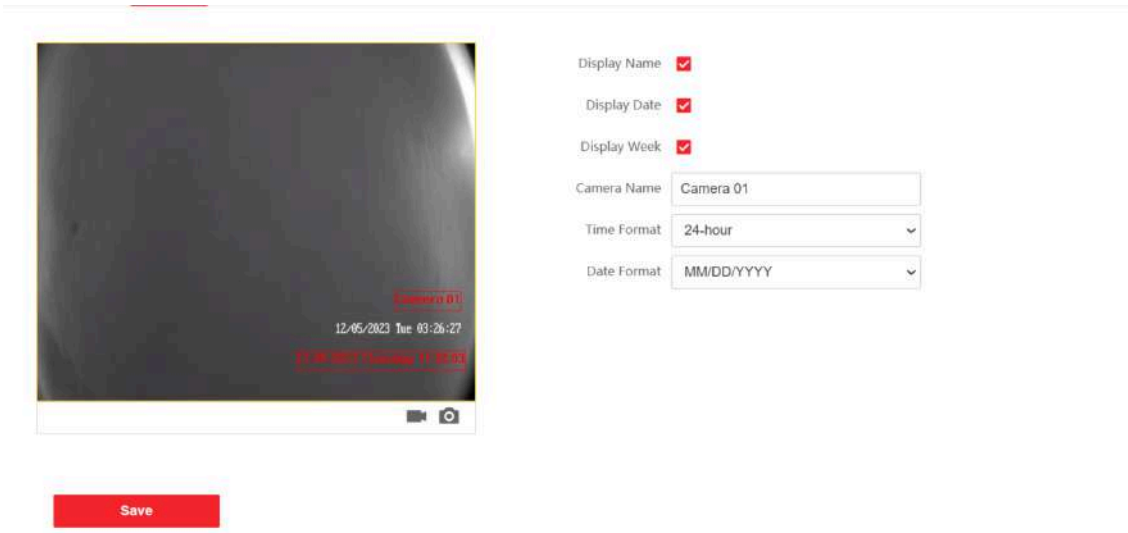

Figure 6-13 OSD

2. Check to enable **Display Name**, **Display Date** or **Display Week** at your actual needs.
3. Edit the **Camera Name**.

Note

You can edit the camera name only when **Display Name** is enabled.

4. Select from the drop-down list to set the **Time Format** and **Date Format**.
5. Click **Save** to enable the settings.

Target Cropping

Steps

1. Click **Image → Crop** to enter the page.
2. Check **Enable Target Cropping** to enable the function.
3. Click to capture photo.
4. Click to start recording.
5. Select **Cropping Resolution**.
6. Click **Save**.

Note

- You can select **Cropping Resolution** as **704*576**, **1280*720**, or **1920*1080**.
- You can zoom in or zoom out the image by selecting **Cropping Resolution** after clicking **Save**.

6.5.14 Event Settings

Motion Detection

Motion detection detects the moving objects in the configured security area, and a series of actions can be taken when the alarm is triggered.

Steps

1. Click **Event → Basic Event → Motion** to enter the settings page.

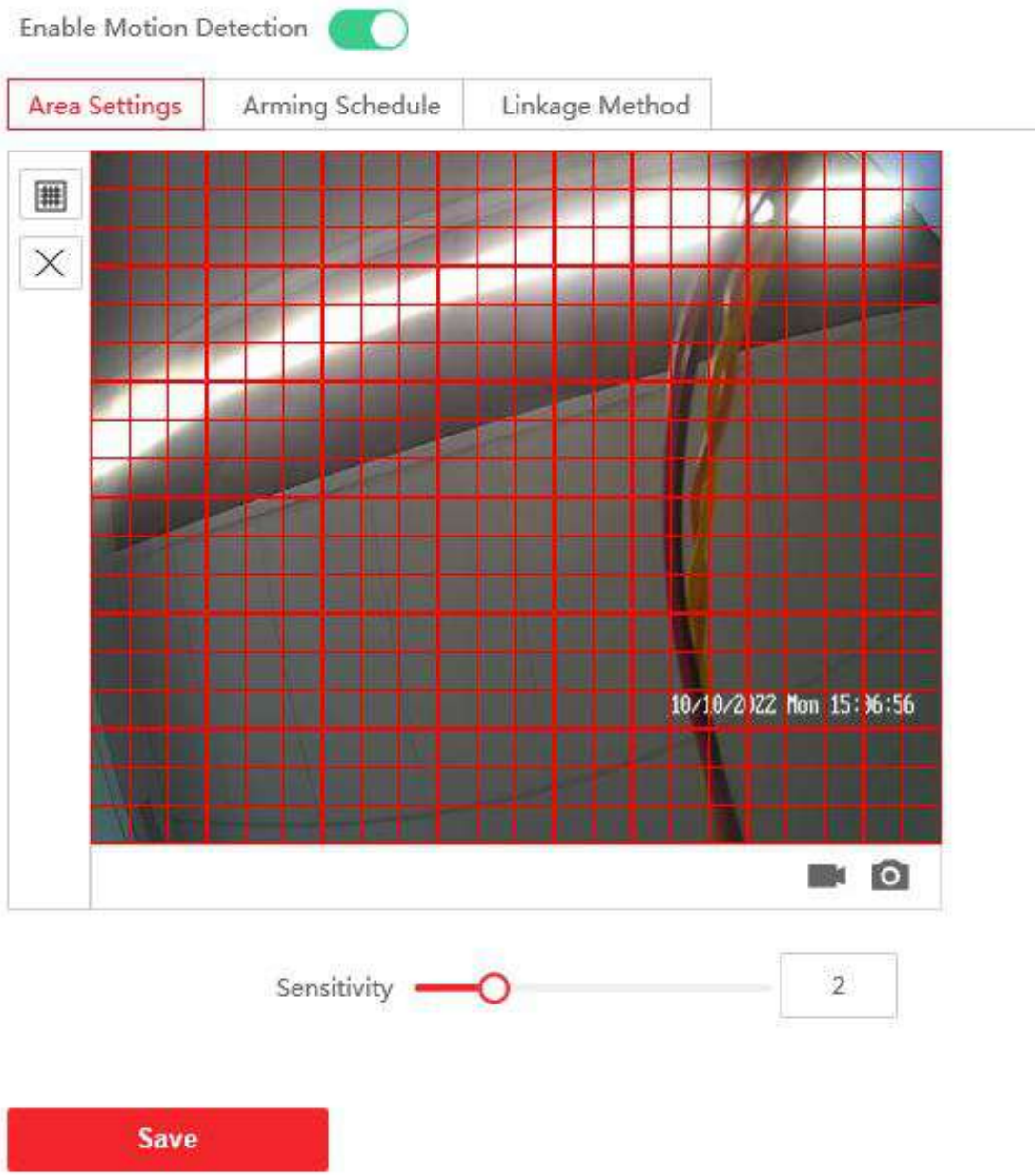

Figure 6-14 Motion Detection

2. Click to **Enable Motion Detection**.
3. Click **Draw Area**. Click and drag to draw a motion detection area.

Clear Area	Click **Clear All** to clear all of the areas.
Adjust Sensitivity	Move the slider to set the sensitivity of the detection.

4. Click **Arming Schedule** to edit the arming schedule.
5. Click on the time bar and drag to select the time period. Click **Save** to save the settings.

Delete Schedule Click **Delete** to delete the current arming schedule.

6. Click **Linkage Method** to enable the linkages.

   Notify Security Center

   Send an exception or alarm signal to the remote management software when an event occurs.

7. Click **Save** to enable the settings.

Event Linkage

Steps

1. Click **Event → Basic Event → Event Linkage** to enter the settings page.

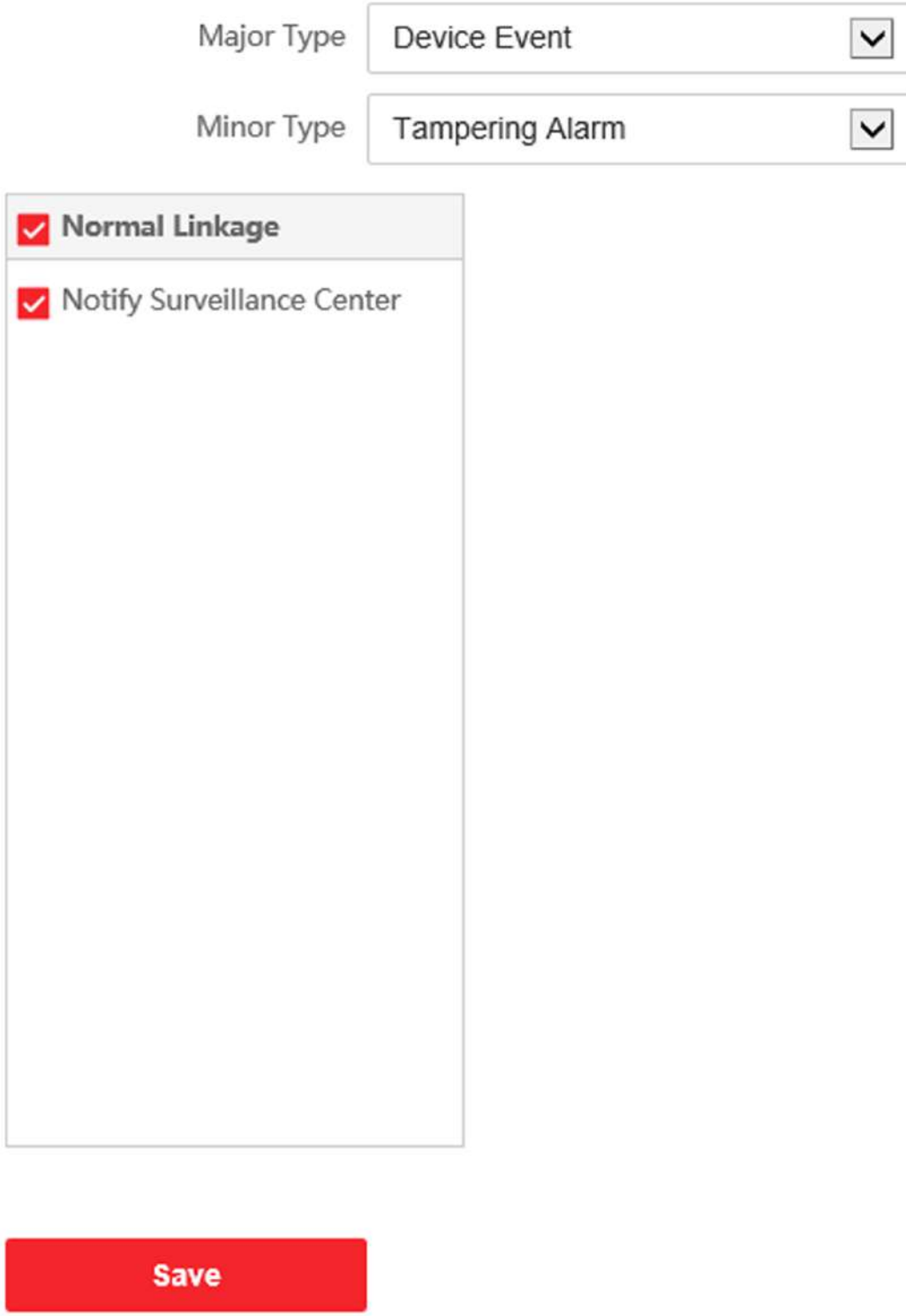

Figure 6-15 Event Linkage

2. Select the **Major Type** as **Device Event** or **Door Event**.
3. Select the type of the **Normal Linkage** for the event.
4. Click **Save** to enable the settings.

6.5.15 Schedule Settings

You can create call schedule, or else the device will call indoor station all day by default.

Steps

1. Click **Schedule → Video Intercom → Call Schedule** .
2. Click the next row below **Enable Indoor Station All Day by Default**.
3. Enter **Schedule Name**.
4. Select **Call Type**.
5. Set **Weekly Schedule**.
   1) Click **Weekly Schedule**.

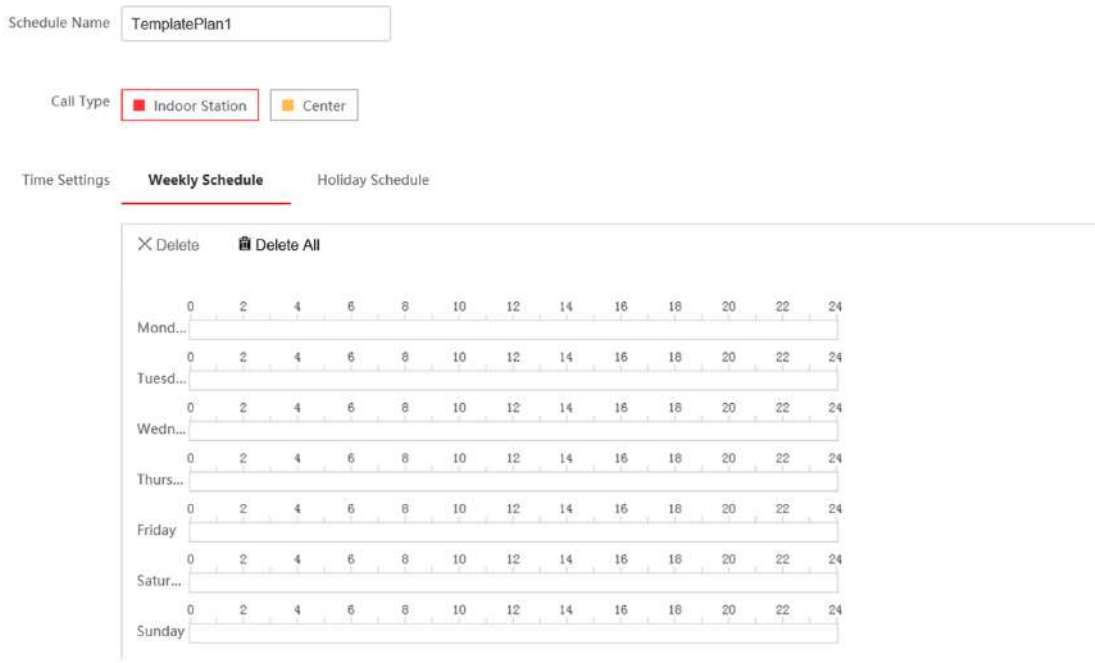

Figure 6-16 Weekly Schedule

   2) Drag mouse to set the schedule according to the actual needs.
   3) **Optional:** Click the copy icon to copy the schedule to other days according to the actual needs.
   4) Click **Save**.
6. Set **Holiday Schedule**.
   1) Click **Holiday Schedule**.

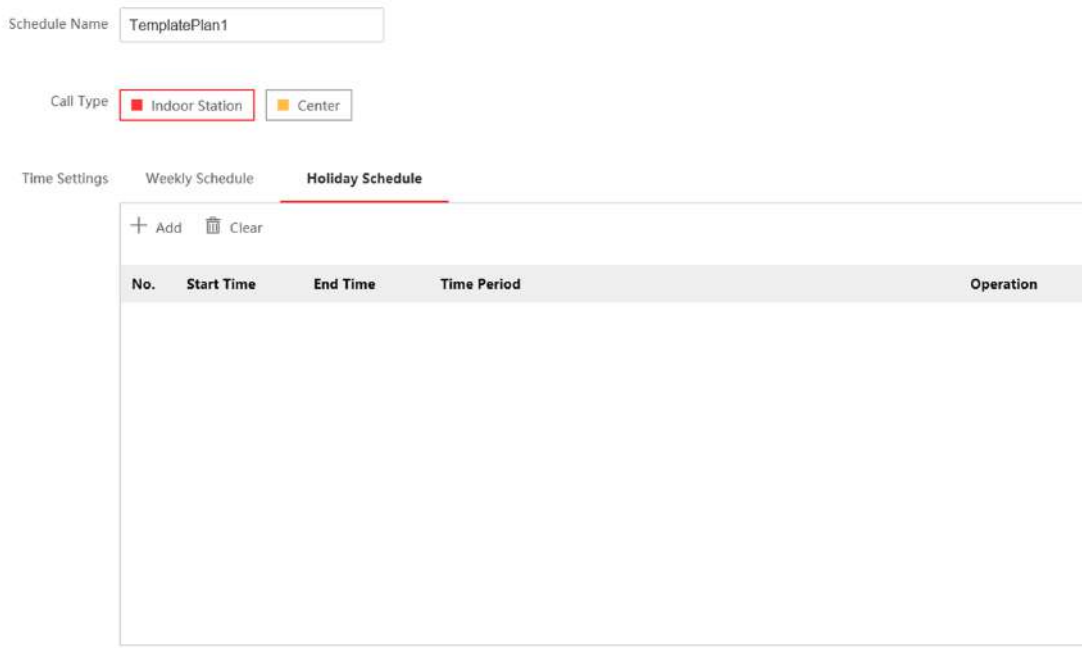

Figure 6-17 Holiday Schedule

2) Click **Add**.
3) Set **Start Time** and **End Time**.
4) Select **Call Type**.
5) Drag mouse to set the schedule according to the actual needs.
6) Click **OK**.
7) You can edit or delete the schedule according to the actual needs.
8) Click **Save**.

Note

The holiday schedule have higher priority than weekly schedule when you set the two schedule at the same time.

6.5.16 Set Card Security

Click **Configuration → General → Card Security** to enter the settings page.

You can check to enable DESFire card and click to enable DESFire Card Read Content. Click **Save** to save the settings.

Enable DESFire Card

The device can read the data from DESFire card when enabling the DESFire card function.

DESFire Card Read Content

After enable the DESFire card content reading function, the device can read the DESFire card No.

6.5.17 Intercom Settings

Device No. Configuration

Set the No. of the device, and linked devices can build a communication.

Steps

1. Click **Intercom → Device No.** to enter the settings page.

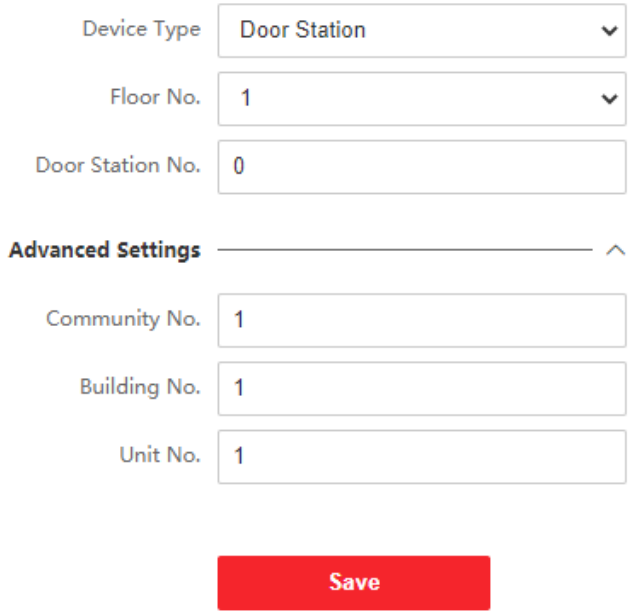

Figure 6-18 Device No. Settings

2. Select the device type from the drop-down list, and set the corresponding information.
3. Click **Save** to enable the device number configuration.

Note

- For main door station (D series or V series), the serial No. is 0.
- For sub door station (D series or V series), the serial No. cannot be 0. Serial No. ranges from 1 to 99.
- For each villa or building, at least one main door station (D series or V series) should be configured, and one sub door stations (D series or V series) can be customized.
- For one main door station (D series or V series), up to 16 sub door stations can be configured.

Linked Network Settings

Steps

1. Click **Intercom → Session Settings** to enter the settings page.

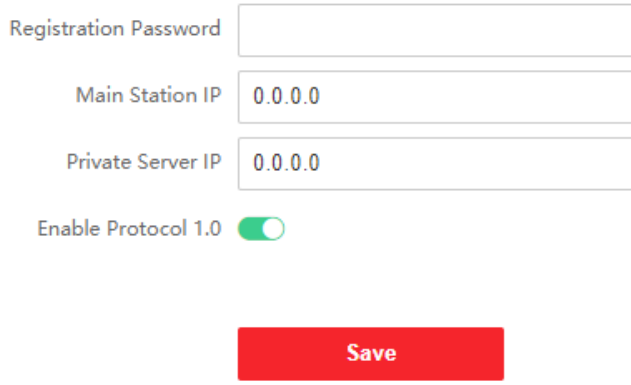

Figure 6-19 Session Settings

2. Set **Registration Password**.
3. Set **Main Station IP** and **Video Intercom Server IP**.
4. Click to enable Protocol 1.0.
5. Click **Save** to enable the settings.

Password Settings

Set public password.

Click **Intercom → Password Settings** to enter the page.

Click **Add** to add password.

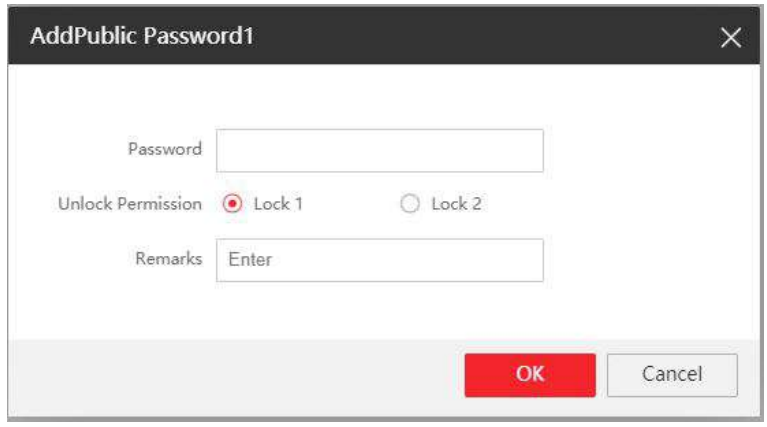

Figure 6-20 Add Password

Set password and remarks and click to enable electric lock.

Click **Save** to save the settings.

Call Settings

Go to **Intercom → Call Settings** to enter the page.

Configure **Max. Call Duration**, **Max. Message Duration** and **Max. Ring Duration**, and click **Save**.

Note

- Max. call duration between the module indoor station and client ranges from 90 s to 120 s. The call will end automatically when the actual calling duration is longer than the configured one.
- Max. message duration ranges from 30 s to 60 s. The message will end automatically when the actual message duration is longer than the configured one.
- Max. ring duration ranges from 65 s to 255 s.

Ring-Back Tone Settings

Click **Intercom → Ringbacktone Settings** to enter the settings page.

Click **Add** to select the ring tone from PC.

Note

Available Audio Format: WAV、AAC, Size: Less than 600 KB, Sample Rate: 8000Hz, Mono.

Press Button to Call

Steps

1. Click **Intercom → Press Button to Call** to enter the page.
2. Select **Sub Module** from the drop-down list.

   Note

   You can set No. of the sub module via the DIP switch.
3. Fill in the room No. of the indoor station in the blank of the **Button Setting** column.
4. Select time schedule plan from the drop-down list. For more information about the time schedule, please refer to ***Schedule Settings*** .
5. You can also view button image and set backlight.
6. Click **Save** to enable the settings.

   After configuration, you can press the button on the module to call relative indoor station.

Set I/O Parameters

You can set I/O Parameters on PC Web.

Steps

1. Click **Configuration → Video Intercom → I/O Settings** .
2. Select Input 2 as **Disable** or **Door Status**. Select Input 3 and Input 4 as **Disable** or **Exit Button**.

   Note

   The Input 1 is **Door Status** by default.
3. Select Output 2 as **Disable**, **Mechanical Doorbell** or **Electric Lock**.

   Note

   The Output 1 is **Electric Lock** by default.

Sub Module Configuration

Steps

1. Click **Intercom → Sub Module Configuration** , and you can view the sub module information, including No., module type, status, and version.
2. Click to edit the sub module.

   Display Module

   - Slide to adjust **Screen Backlight Brightness**.
   - Slide **Enable Buzzer** to enable the function.

   Touch Screen Module

   - Adjust **Screen Backlight Brightness**.
   - Slide **Enable Buzzer** to enable the function.
   - Select **Default Home Page** which will be displayed on the screen of the module.

   PMR Module

   Click to enable power consumption selection.

   You can select **8 W**, **6 W** or **4 W** for the PMR Module.

   Note

   If the system power goes off, an external power supply of 12 V, 2 A for the main unit is necessary.

Note

- The module address is used to differentiate the sub modules.
- K12 module, KK module and alarm in module belong to nametag modules.
- The room No. for the main unit's call button is 1 by default; and the room No. for other call buttons will start with 2. The number will increase continuously. For example, the room No. of the first nametag module range from 2~7, the room No. of next nametag module will range from 8~13.

Number Settings

Link the room No. and SIP numbers.

Click **Number Settings** to enter the page.

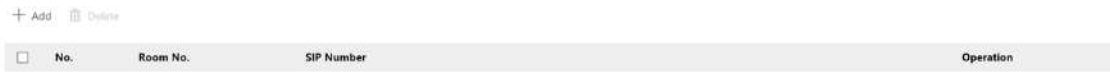

Figure 6-21 Number Settings

Click **Add**, set the **Room No.** and SIP numbers in the pop-up dialog box.

6.5.18 Access Control Settings

Door Parameters

Set the parameters of the door which is linked to the device.

Steps

1. Click **Access Control → Door Parameters** to enter the settings page.

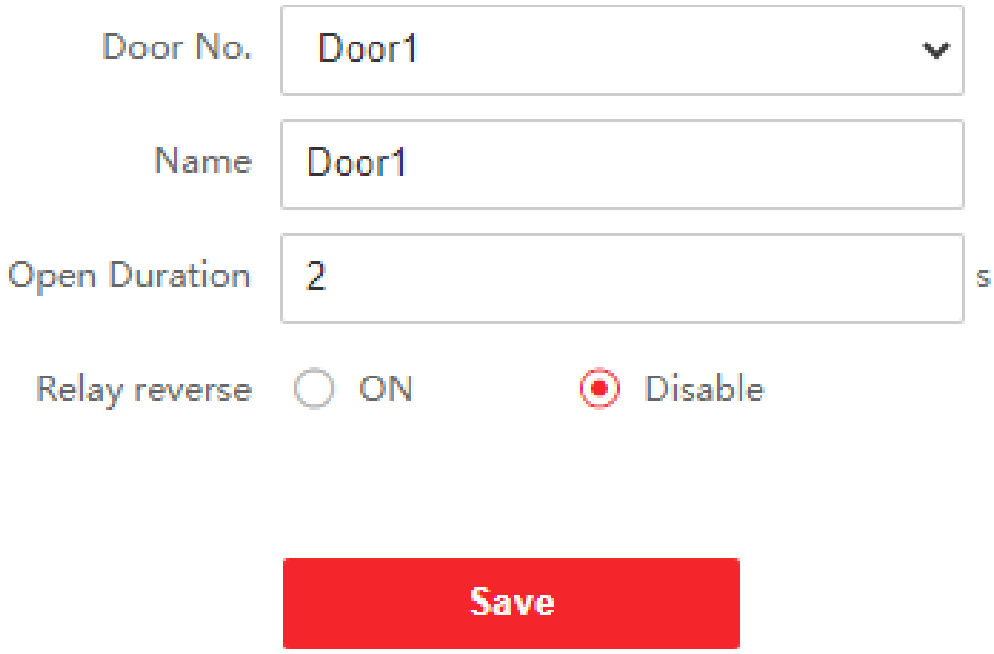

Figure 6-22 Door Parameters

2. Select **Door No.**, and edit the **Name**.
3. Set **Open Duration**. When the time to open over the open duration you set, the door will be locked again.
4. Select **Relay Reverse** as **ON** or **Disable**.
5. Click **Save** to enable the settings.

Elevator Control

Before You Start

Make sure that the door station is in the mode of main door station. Only the main door station supports elevator control function.

Steps

1. Click **Access Control → Elevator Control Parameter** to enter the settings page.

Figure 6-23 Elevator Control

2. Check to enable elevator control function.
3. Select an Elevator No., and select an elevator controller.
4. Select **Interface Type**.
5. Enter **Negative Floor Capacity**, and select **Alarm Receiver Type**.
6. Enter the elevator controller's **Server IP Address**, **Port No.**, **User Name**, and **Password**.
7. Click **Save** to enable the settings.

Note

- Up to 4 elevator controllers can be connected to one door station.
- Up to 10 negative floors can be added.
- Make sure the interface types of elevator controllers, which are connected to the same door station are consistent.

See Far, Go Further