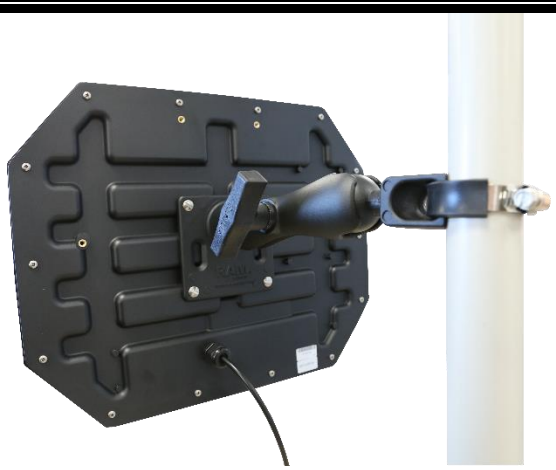

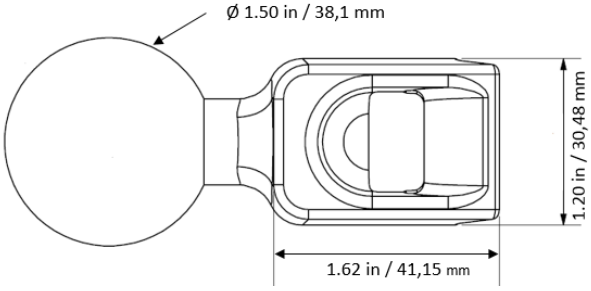

+

Collier de serrage fourni : *Ø 71 à 95 mm*
Metal strap included: *Ø 2.79 to 3.74 in*

+

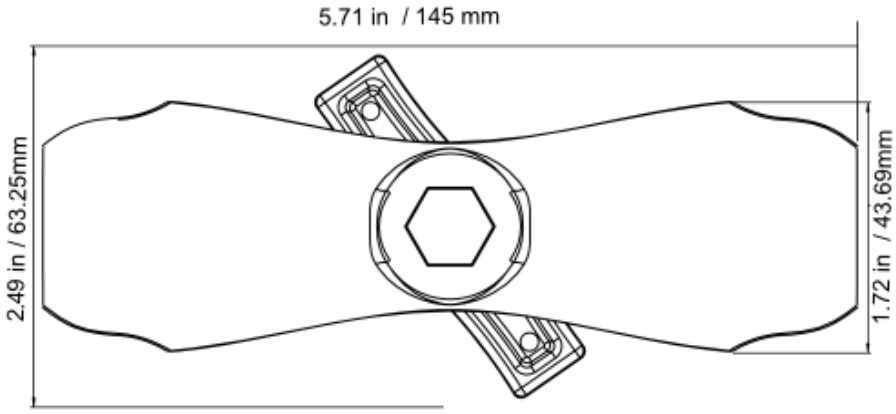

+

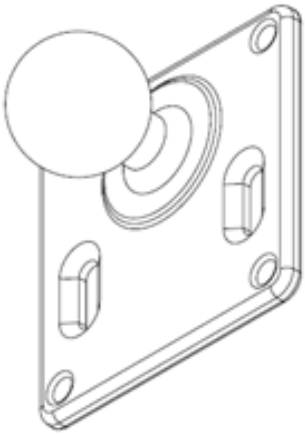

+ 4 x

Vis poelier M4x12 Inox / M4x12 stainless steel screw

STid reserves the right to make change without notice, for the purpose of product improvement.